Appendix C

Shop Drawings for Specimens TCBF-B-1 to TCBF-B-4

TCBF-B-1 Shop Drawings
(UC Berkeley)

Filename: SCBF_20080823_Specimen-Only.dwg Plotted: 8/25/2008 9:34:59 Plot Device: Adobe PDF Page Setup: ---
Plotted by: Jwlai

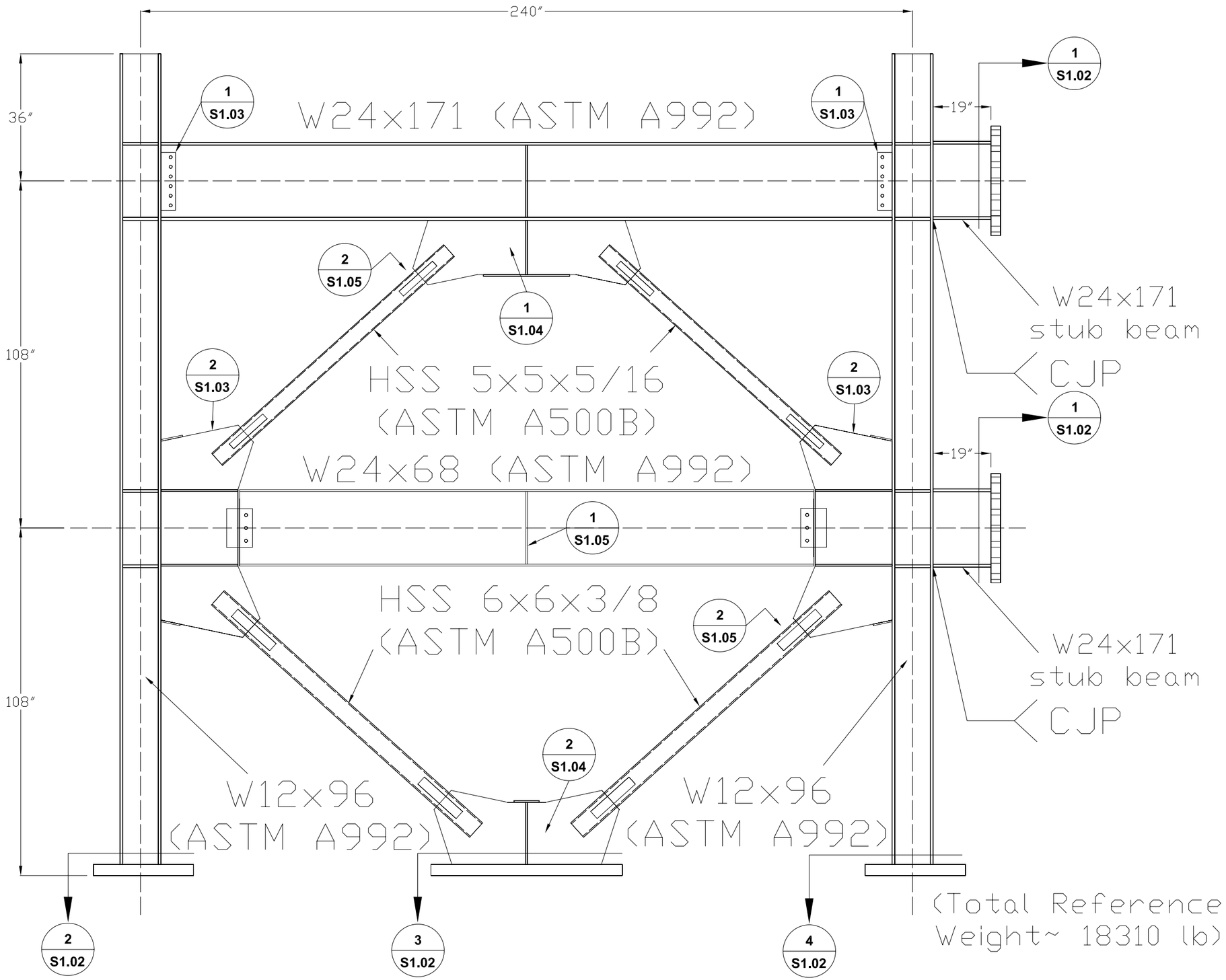

University of California at Berkeley

International Hybrid Simulation of Tomorrow's Braced Steel Frame Structures

REV	REVISION	DATE

revisions

project
SCBF
Phase-01
1301 South 46th Street
Richmond, California, 94804

Address
UC Berkeley
Richmond Field Station
Building 484, Structural Research Lab

content
Specimen Detail
Framing Elevations

drawn by: Jiun-Wei Lai (Adrian)
checked by: Jiun-Wei Lai (Adrian)
date: Aug. 2008
drawing no. S1.01

Filename: SCBF_20080823_Specimen-Only.dwg Plotted: 8/25/2008 9:28:40 Plot Device: Adobe PDF Page Setup: ---
Plotted by: Jwlai

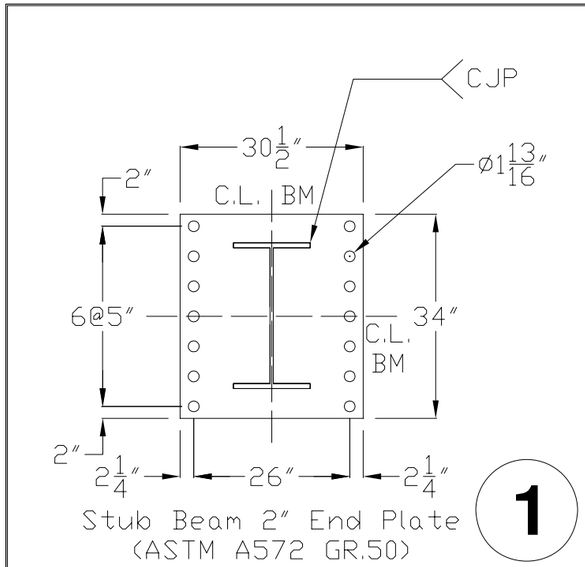

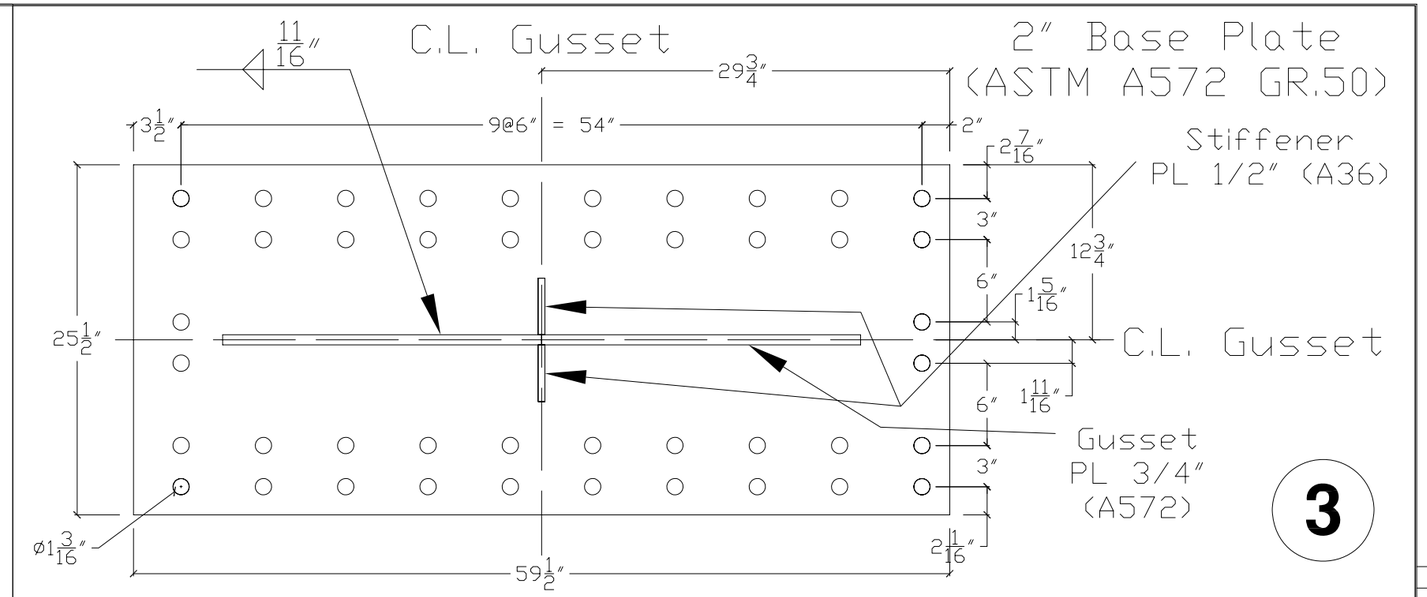

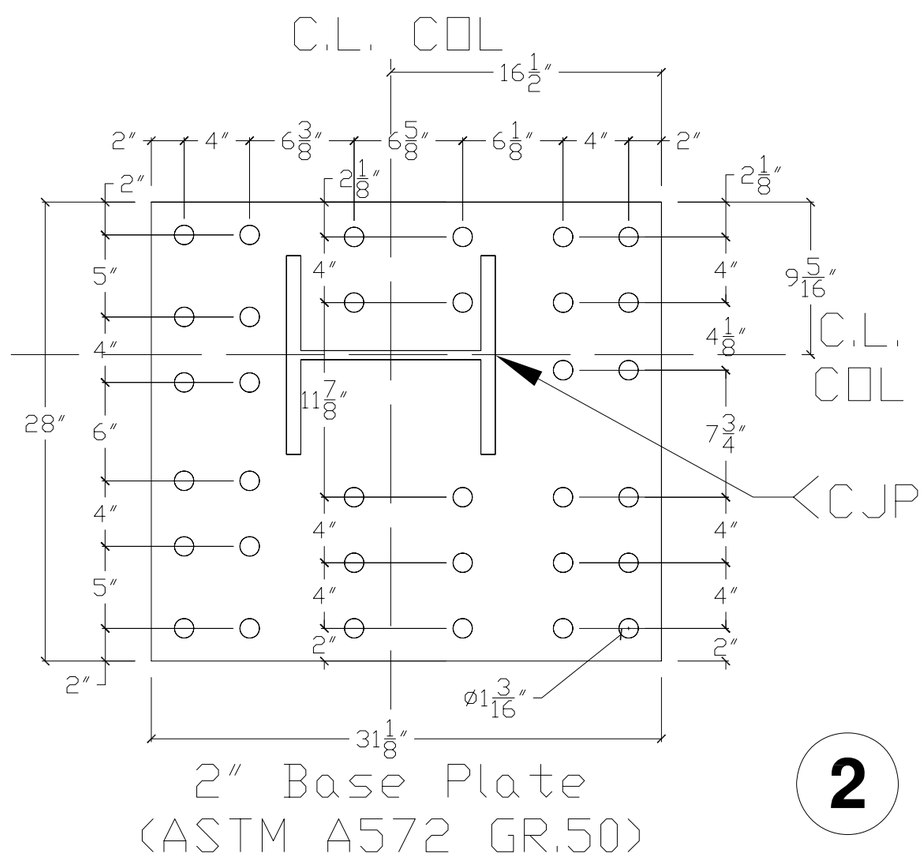

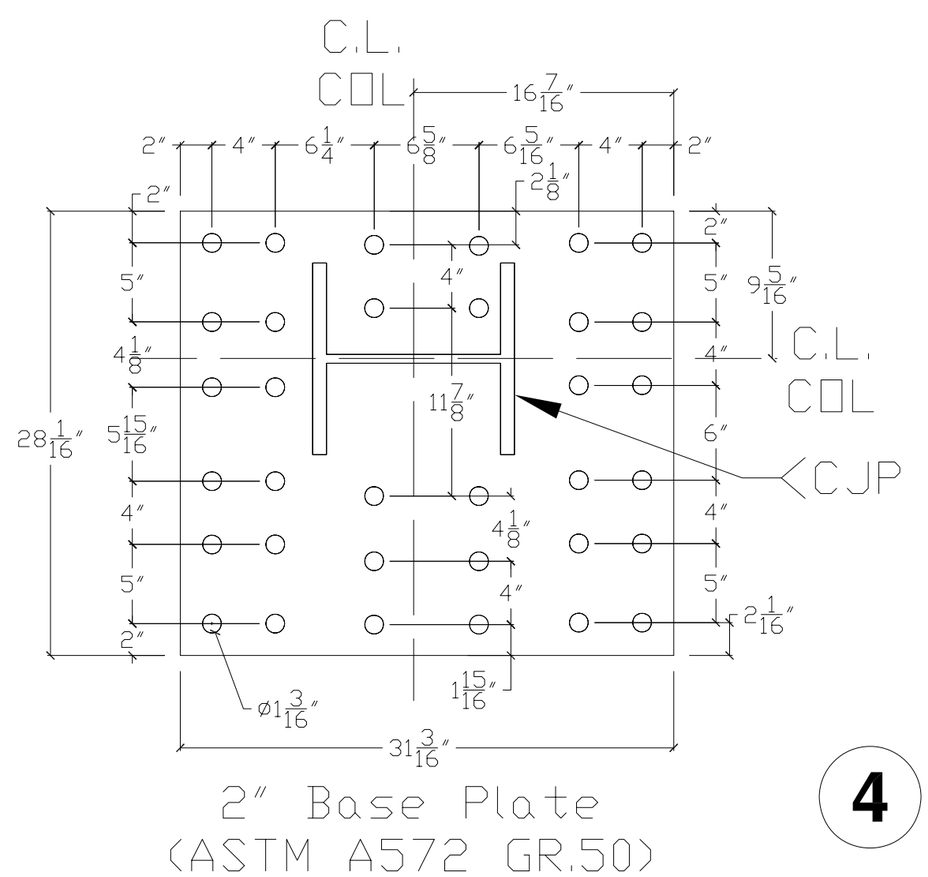

University of California at Berkeley

International Hybrid Simulation of Tomorrow's Braced Steel Frame Structures

REV	REVISION	DATE

revisions

project
SCBF
Phase-01
1301 South 46th Street
Richmond, California, 94804

Address
UC Berkeley
Richmond Field Station
Building 484, Structural Research Lab

content
Specimen Detail
Base Plates & End Plates

drawn by: Jiun-Wei Lai (Adrian)
checked by: Jiun-Wei Lai (Adrian)
date: Aug. 2008
drawing no. S1.02

Filename: SCBF_20080823_Specimen-Only.dwg Plotted: 8/25/2008 9:28:57 Plot Device: Adobe PDF Page Setup: ---
Plotted by: Jwlai

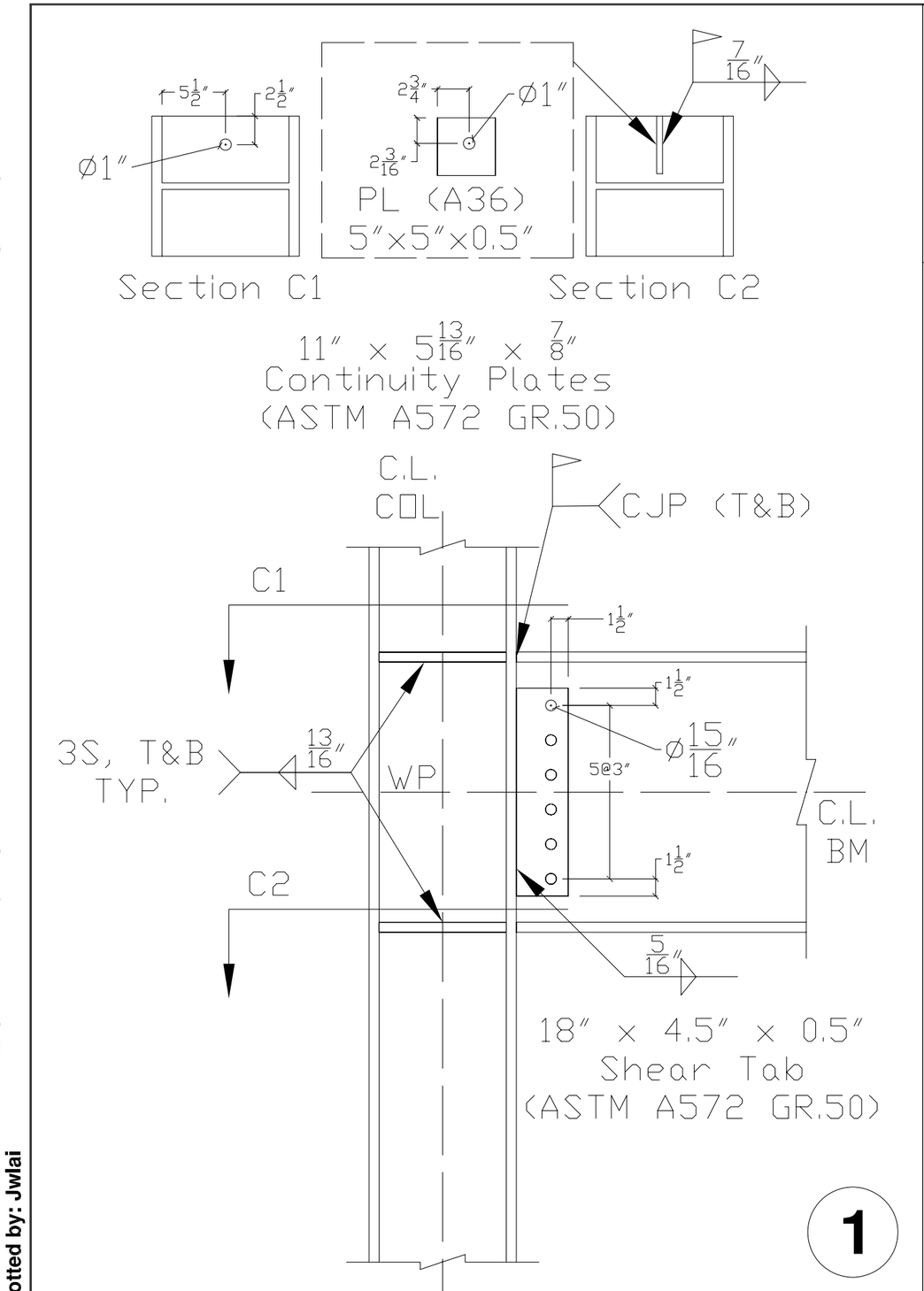

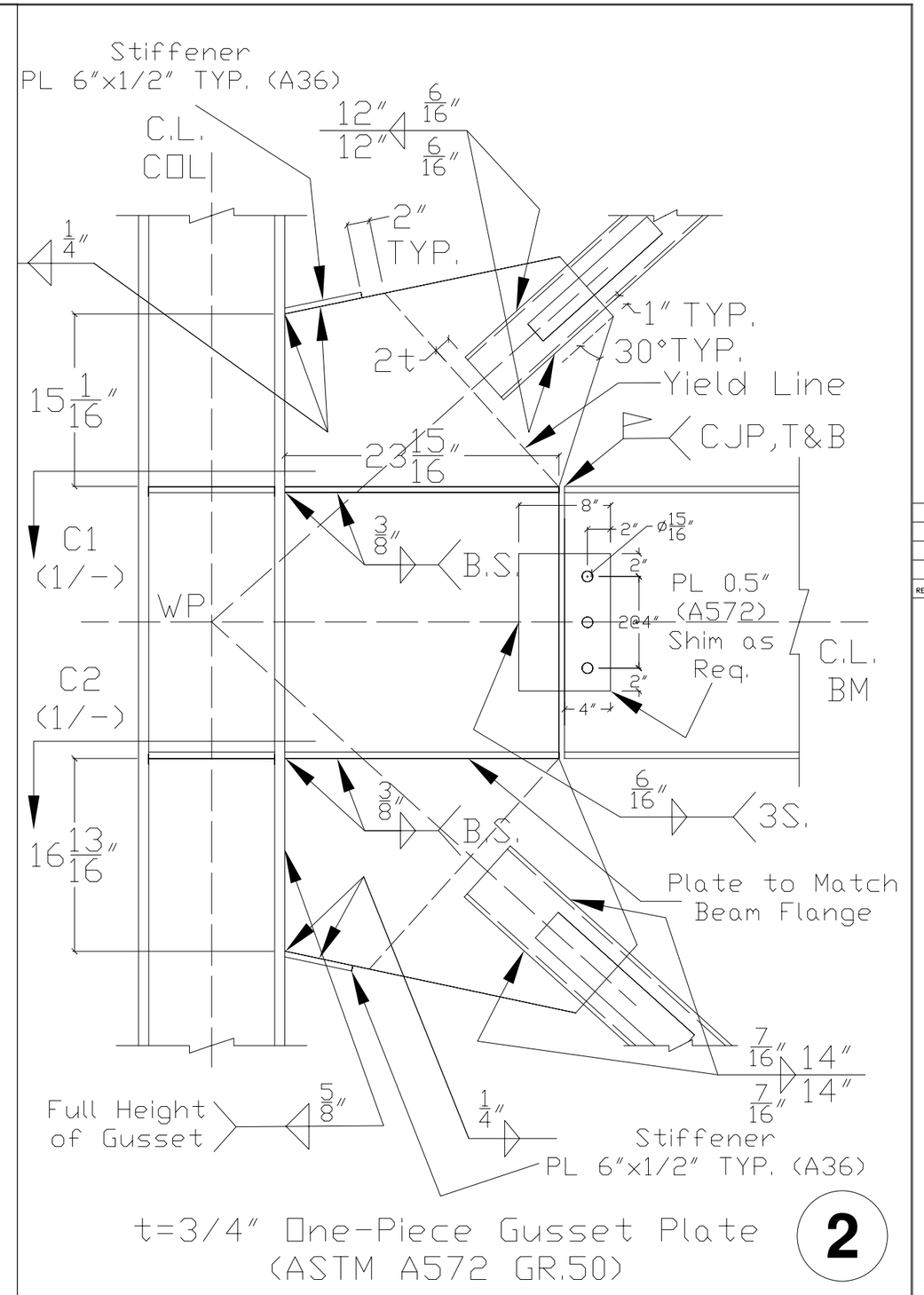

University of California at Berkeley

International Hybrid Simulation of Tomorrow's Braced Steel Frame Structures

REV	REVISION	DATE

revisions

project
SCBF
Phase-01
1301 South 46th Street
Richmond, California, 94804

Address
UC Berkeley
Richmond Field Station
Building 484, Structural Research Lab

content
Specimen Detail
Connections

drawn by: Jiun-Wei Lai (Adrian)
checked by: Jiun-Wei Lai (Adrian)
date: Aug. 2008
drawing no. S1.03

Filename: SCBF_20080823_Specimen-Only.dwg Plotted: 8/25/2008 9:29:12 Plot Device: Adobe PDF Page Setup: ---
Plotted by: Jwlai

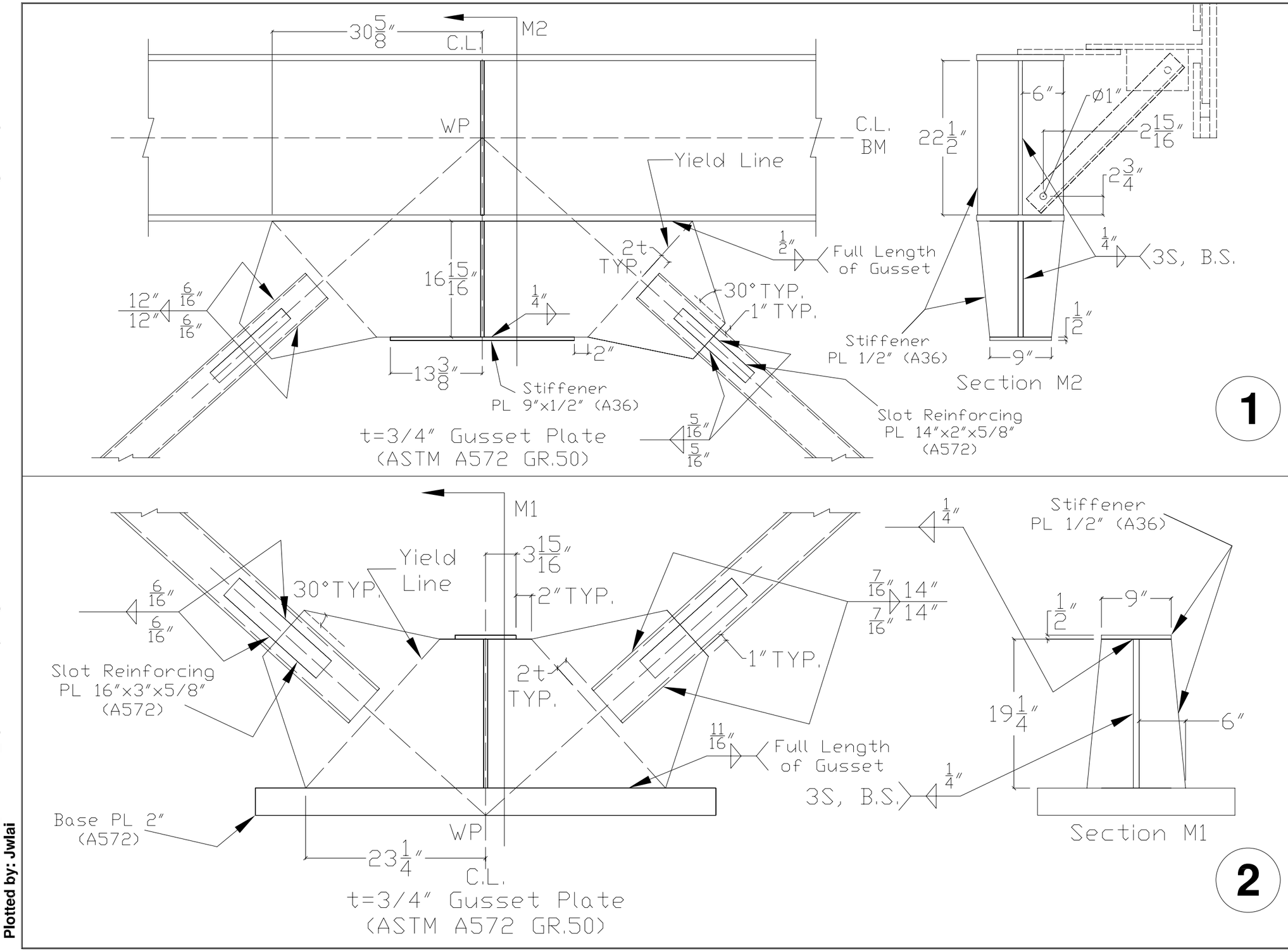

University of California at Berkeley

International Hybrid Simulation of Tomorrow's Braced Steel Frame Structures

REV	REVISION	DATE

revisions

project
SCBF
Phase-01
1301 South 46th Street
Richmond, California, 94804

Address
UC Berkeley
Richmond Field Station
Building 484, Structural Research Lab

content
Specimen Detail
Gusset Plates

drawn by: Jiun-Wei Lai (Adrian)
checked by: Jiun-Wei Lai (Adrian)
date: Aug. 2008
drawing no. S1.04

Filename: SCBF_20080823_Specimen-Only.dwg Plotted: 8/25/2008 9:29:27 Plot Device: Adobe PDF Page Setup: ---
Plotted by: Jwlai

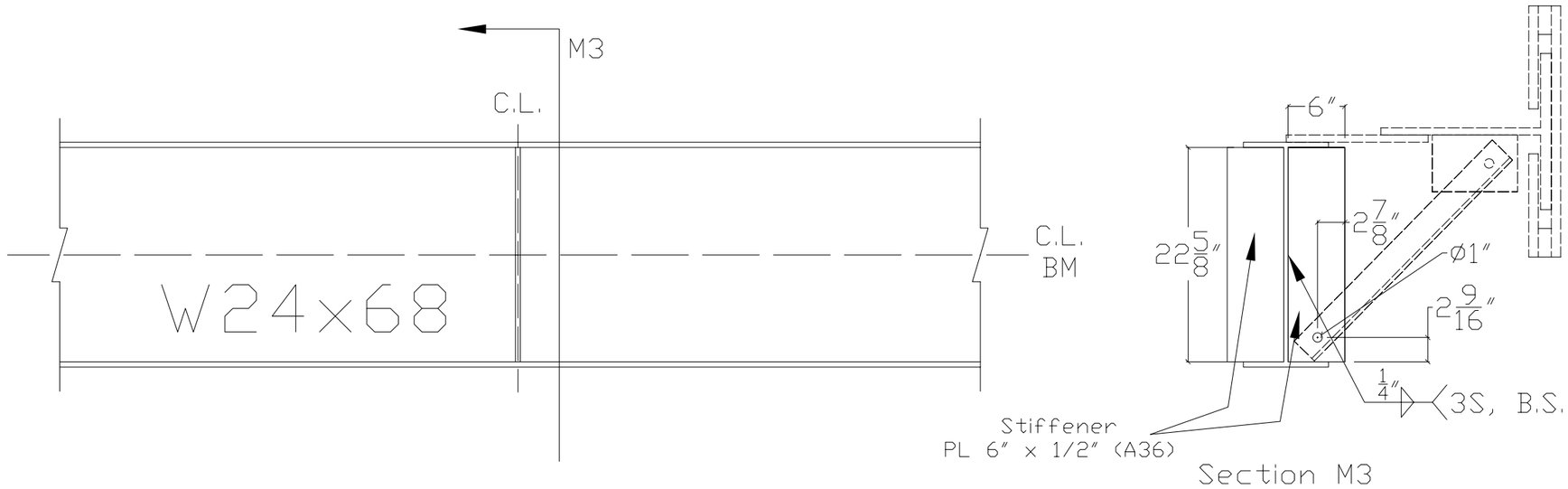

1

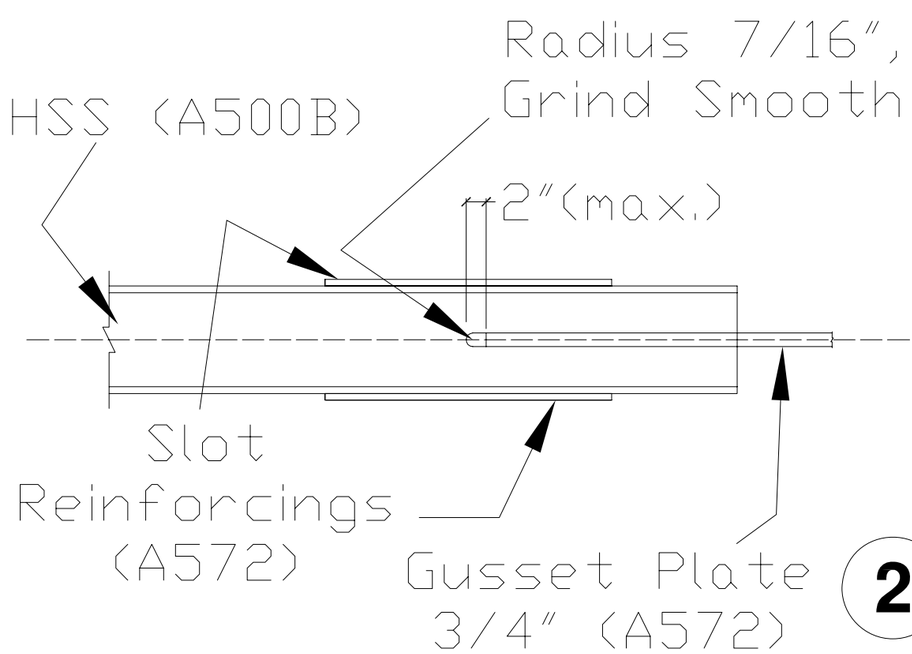

2

3

University of California at Berkeley

International Hybrid Simulation of Tomorrow's Braced Steel Frame Structures

REV	REVISION	DATE

revisions

project
SCBF
Phase-01
1301 South 46th Street
Richmond, California, 94804

Address
UC Berkeley
Richmond Field Station
Building 484, Structural Research Lab

content
Specimen Detail
MISC Details

drawn by: Jiun-Wei Lai (Adrian)
checked by: Jiun-Wei Lai (Adrian)
date: Aug. 2008
drawing no.
S1.05

TCBF-B-1 Shop Drawings
(Herrick Steel)

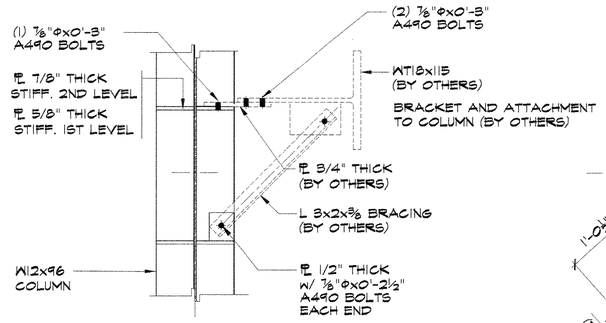

6 SECTION

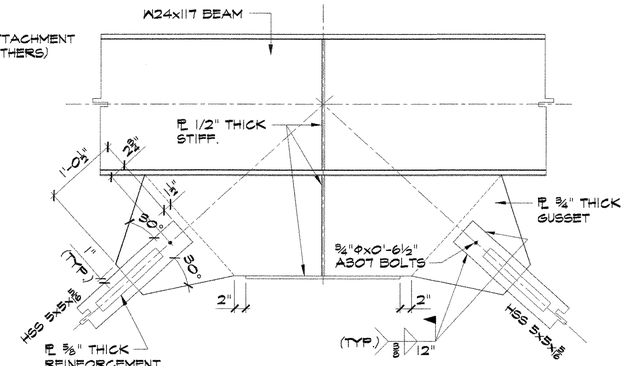

3 DETAIL

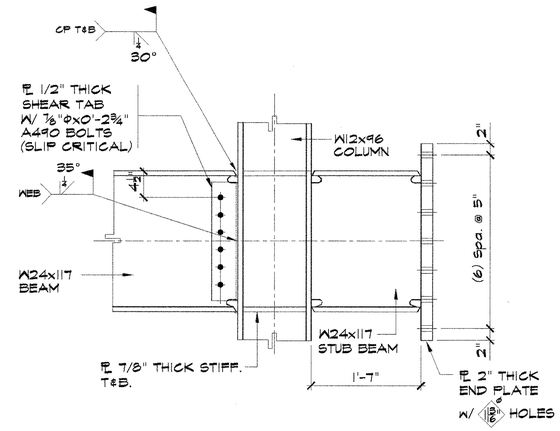

1 DETAIL

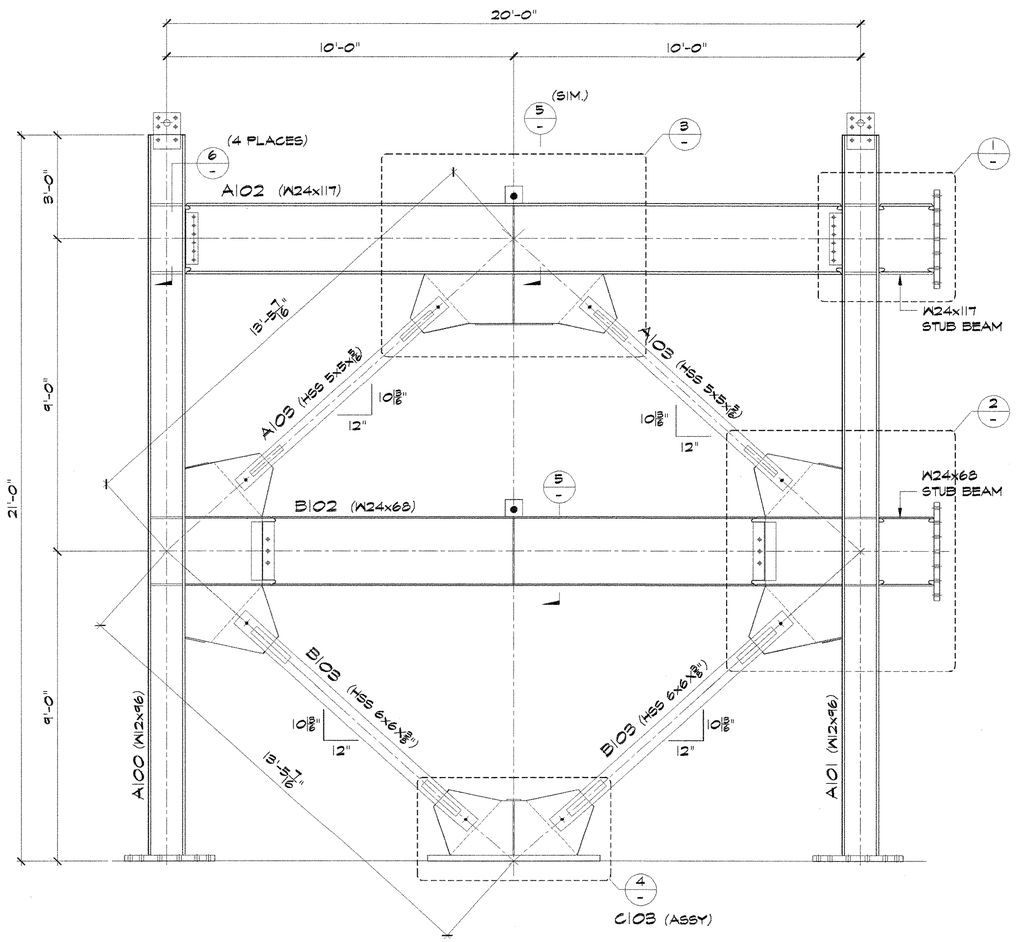

(ONE) BRACE FRAME ASSEMBLY

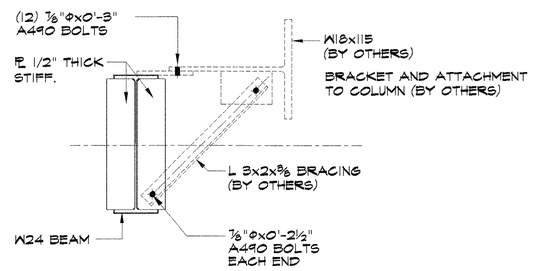

5 SECTION

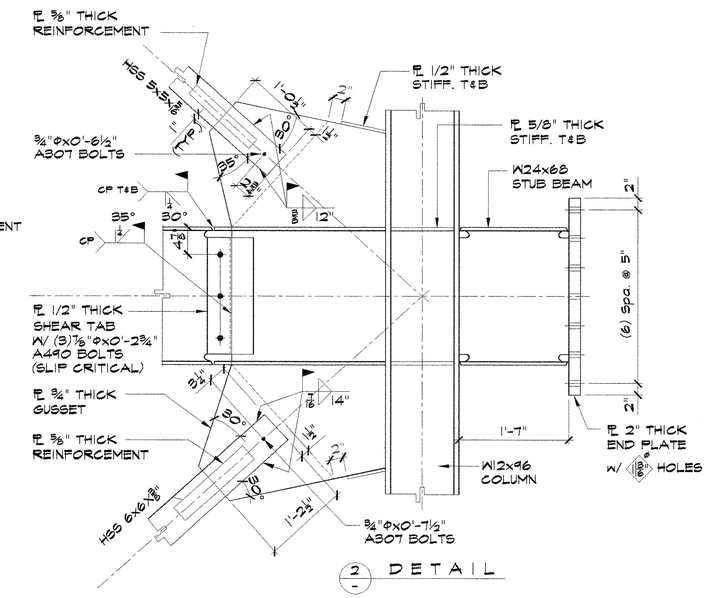

2 DETAIL

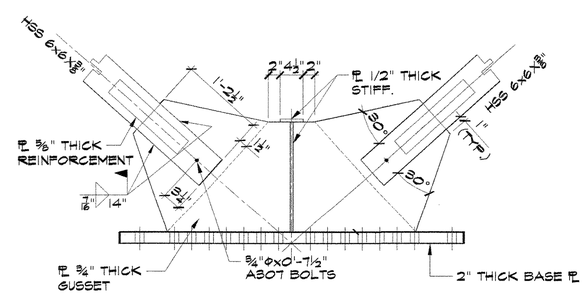

4 DETAIL

REV	DATE	DESCRIPTION	BY	CHK
3	03/02/09	REVISED FOR FABRICATION	AEU	
2	02/20/09	REVISED PER SUBMITTAL MARK UP	AEU	

MTL. GR. DENOTES MATERIAL GRADE			
	1 = A36	5 = A572-42	6 = A500-B
	2 = A572-50	28 = A992-50	7 = A573-B

UNIVERSITY OF CALIFORNIA at BERKELEY
INTERNATIONAL HYBRID SIMULATION BRACING
BERKELEY, CA.

MATERIAL
CODE
INPUT
SHOP ISSUE

Herrick

HOLES :	DRAWN BY	AEU	DATE	01-02-2009	JOB	9890
PAINT :	CHECKED BY	RA	DATE	02-03-2009	SHEET	E1 (2)

SCALE - 1/2"=1'

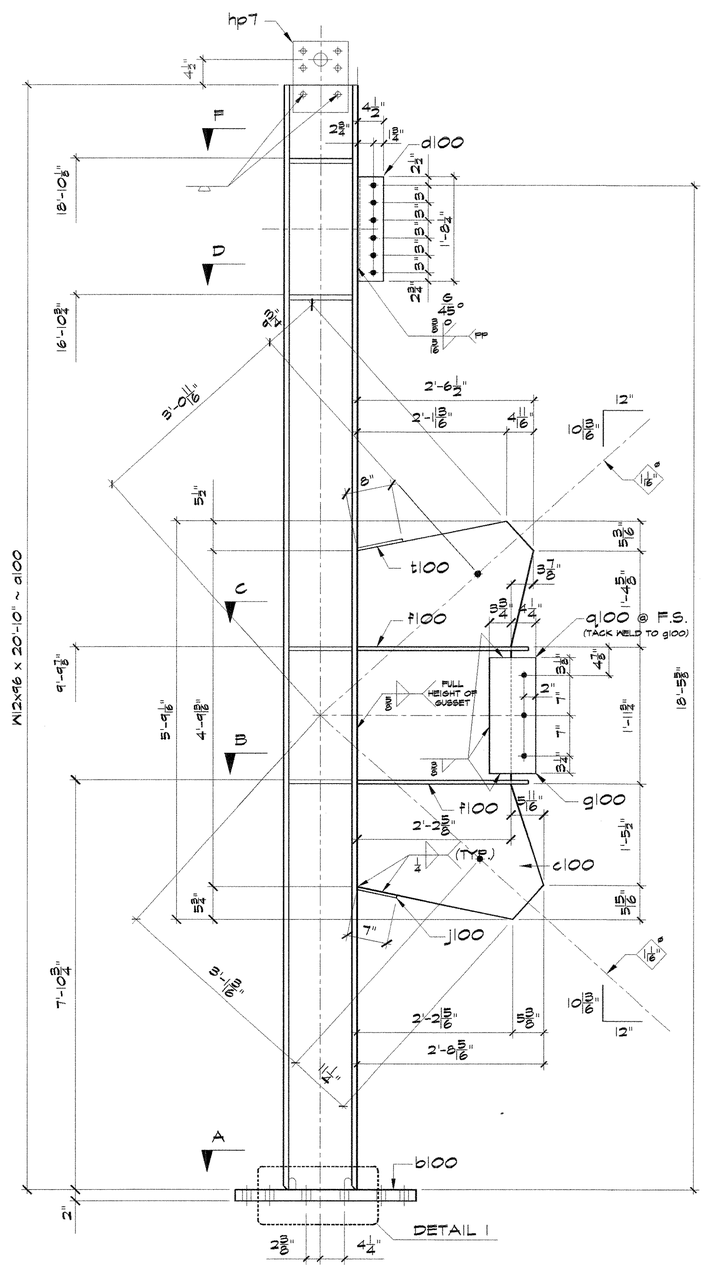

(ONE) COLUMN ~ A100

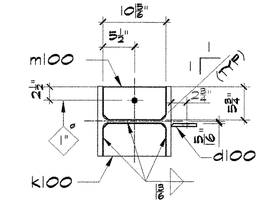

SECTION - F

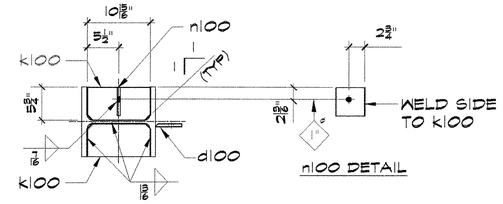

SECTION - D

n100 DETAIL

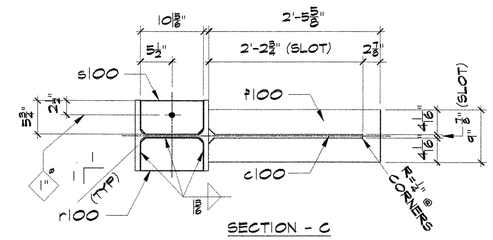

SECTION - C

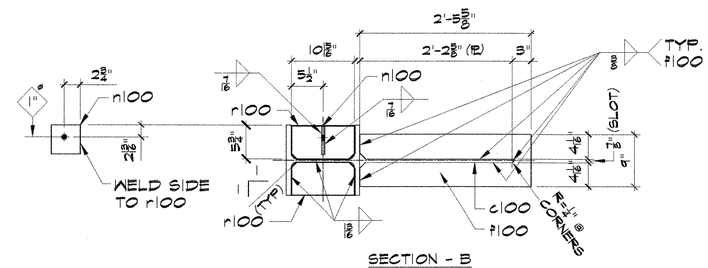

SECTION - B

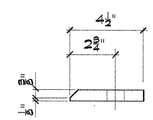

d100 DETAIL

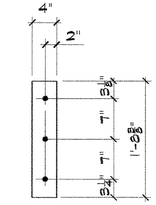

q100 DETAIL

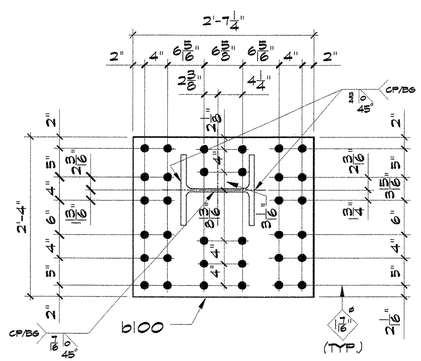

SECTION - A

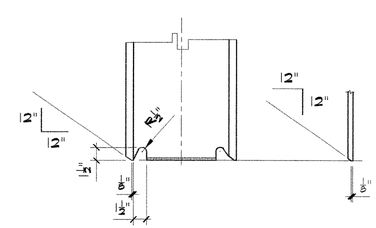

DETAIL 1

BILL OF MATERIALS

QTY.	DESCRIPTION	LENGTH FT	LENGTH INCHES	MARK	●	MTL GR	REMARKS		CODE	MO MTO
ONE	COLUMN			A100	●					
ONE	W12x96	20	10	a100		28			PIE, PIE	901-1
ONE	PL 2x28	2	7¼	b100		2		D	H	901-11
ONE	PL ¾x32 5/16	5	9 1/16	c100		2		D	S/H	901-17
ONE	PL ½x4½	1	8¼	d100		2		P	H/BV	
2	PL ⅝x9	2	5⅝	f100		2		P	S	
ONE	PL ½x8	1	8⅝	g100		2		P	H	
ONE	PL ¾x4½	1	2¾	hp7		2		P	Plain	
ONE	PL ½x7	0	9	j100		1		P	Plain	
3	PL ⅞x5¾	0	10 5/16	k100		2		D	N2CL=1	
ONE	PL ⅞x5¾	0	10 5/16	m100		2		D	H/N	
2	PL ½x5	0	5	n100		1		P	H	
ONE	PL ½x4	1	8⅝	q100		1	SHIM PL	P	H	
3	PL ⅝x5¾	0	10 5/16	r100		2		P	N2CL=1	
ONE	PL ⅝x5¾	0	10 5/16	s100		2		P	H/N	
ONE	PL ½x8	0	9	t100		1		P	Plain	
6	⅞"Φ A490	0	3	hp3730						
4	⅞"Φ A490	0	2½	hp3722						

REV	DATE	DESCRIPTION	BY	CHK
B	03/02/09	REVISED FOR FABRICATION	AEU	RN
A	02/20/09	REVISED PER SUBMITTAL MARK UP	AEU	

MTL GR. DENOTES MATERIAL GRADE: 1 = A36; 2 = A572-50; 5 = A572-42; 28 = A992-50; 6 = A500-B; 7 = A573-B

COLUMN

UNIVERSITY OF CALIFORNIA at BERKELEY

INTERNATIONAL HYBRID SIMULATION BRACING

BERKELEY , CA.

MATERIAL: AEU 02.04.09

CODE: AEU 02.04.09

INPUT: DS 02.18.09

SHOP ISSUE

Herrick

HOLES : 13/16" U.N.O.	DRAWN BY	AEU	DATE	01-20-2009	JOB	9891
PAINT : NONE	CHECKED BY	RA	DATE	02/03/2009	SHEET	100 B

SCALE : 1/2

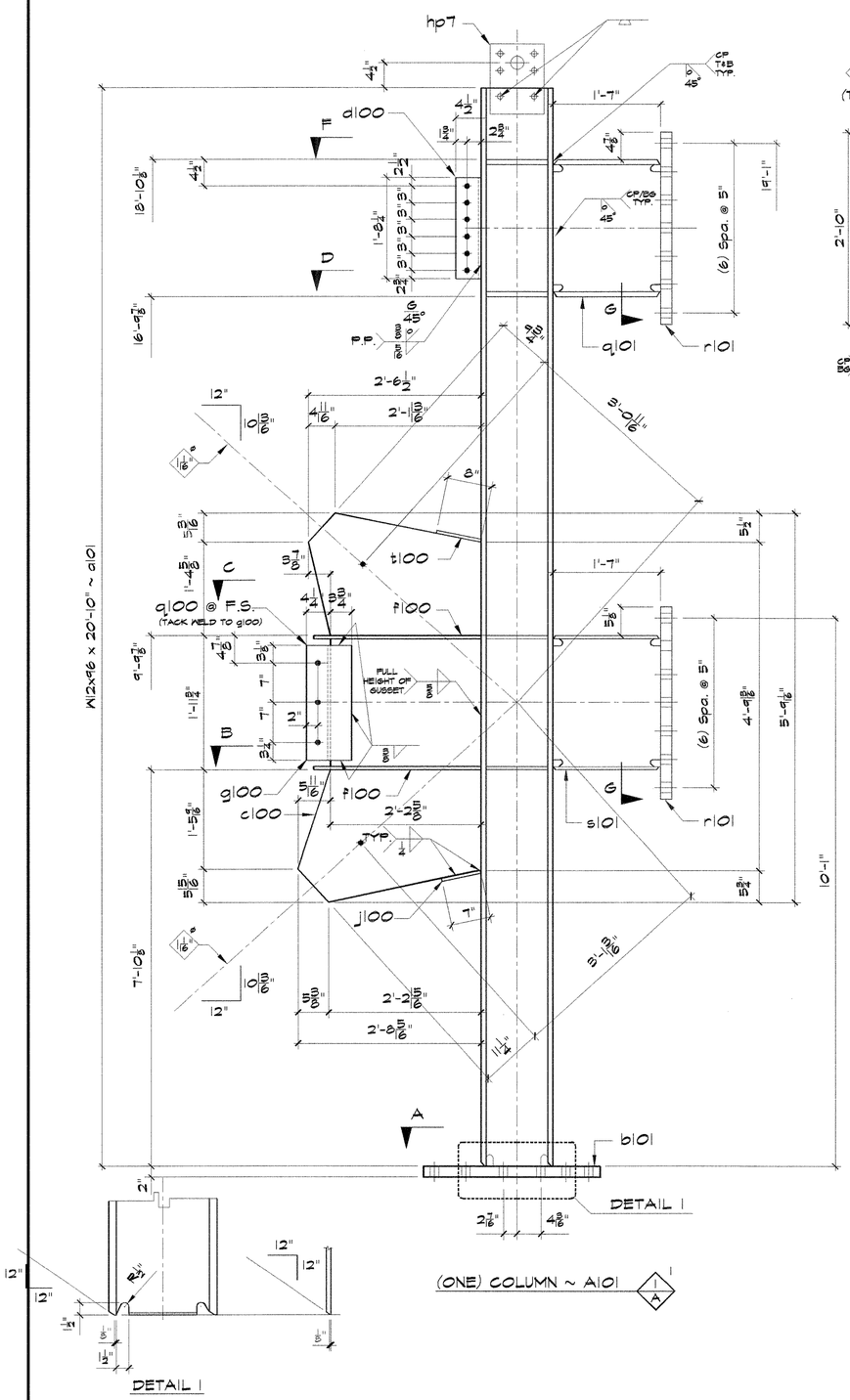

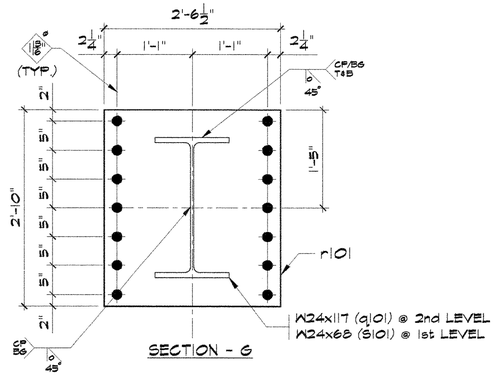

SECTION - G

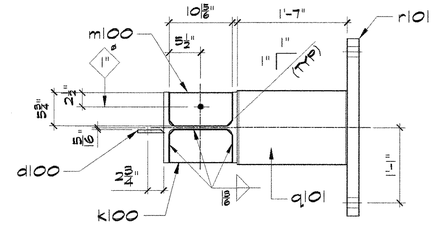

SECTION - F

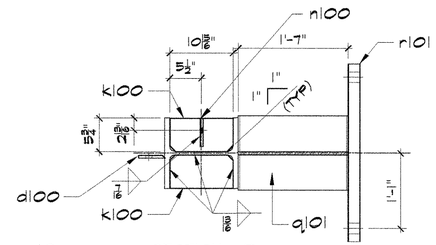

SECTION - D

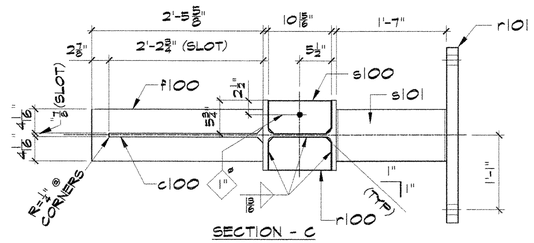

SECTION - C

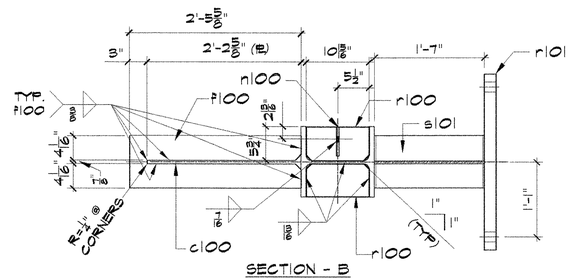

SECTION - B

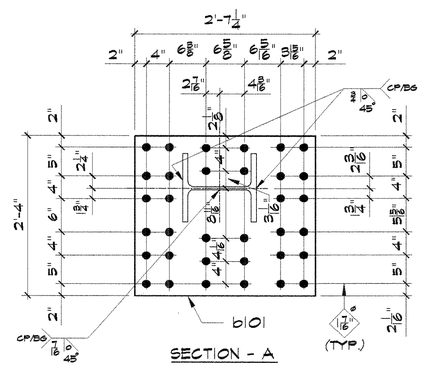

SECTION - A

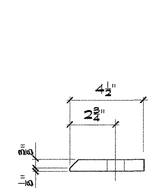

d100 DETAIL

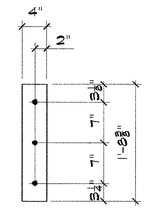

g100 DETAIL

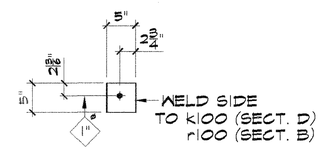

n100 DETAIL

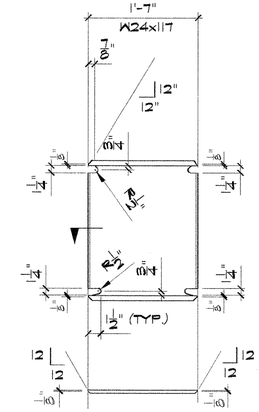

q101 DETAIL

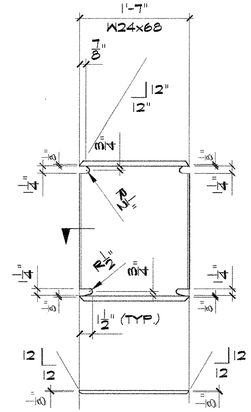

s101 DETAIL

DETAIL 1

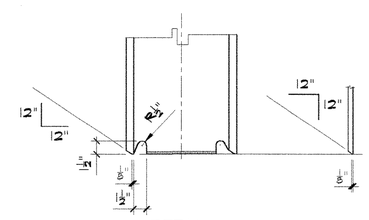

DETAIL 1

BILL OF MATERIALS

QTY.	DESCRIPTION	LENGTH FT	LENGTH INCHES	MARK	●	MTL GR	REMARKS		CODE	MO MTO
ONE	COLUMN			A101	●					
ONE	W12x96	20	10	a101		28			PIE, FIE	901-1
ONE	PL 2x28	2	7¼	b101		2		D	H	901-11
ONE	PL ¾x32 5/16	5	9 1/16	c100		2		D	S/H	901-17
ONE	PL ½x4½	1	8¼	d100		2		P	H/BV	
2	PL ⅝x9	2	5⅝	f100		2		P	S	
ONE	PL ½x8	1	8⅝	g100		2		P	H	
ONE	PL ½x8	0	9	t100		1		P	Plain	
ONE	PL ½x7	0	9	j100		1		P	Plain	
3	PL ⅞x5¾	0	10 15/16	k100		2		D	H/N	
1	PL ⅞x5¾	0	10 15/16	m100		2		D	N2CL=1	
2	PL ½x5	0	5	n100		1		P	H	
ONE	PL ¾x4½	1	2¾	hp7		2		P	H	
ONE	W24x117	1	7	q101		28			F2E	901-4
2	PL 2x30½	2	10	r101		2		D	H	901-15
ONE	W24x68	1	7	s101		28			F2E	901-6
ONE	PL ⅛x4	1	8⅝	q100		1	SHIM PL	P	H	
1	PL ⅝x5¾	0	10 15/16	s100		2		D	H/N	
3	PL ⅝x5¾	0	10 15/16	r100		2		D	N2CL=1	
6	⅞"Φ A490	0	3	fp3730						
4	⅞"Φ A490	0	2½	fp3722						

REV	DATE	DESCRIPTION	BY	CHK
B	03/02/09	REVISED FOR FABRICATION	AEU	RN
A	02/20/09	REVISED PER SUBMITTAL MARK UP	AEU	

MTL. GR. DENOTES MATERIAL GRADE: 1 = A36; 2 = A572-50; 5 = A572-42; 28 = A992-50; 6 = A500-B; 7 = A573-B

COLUMN

UNIVERSITY OF CALIFORNIA at BERKELEY

INTERNATIONAL HYBRID SIMULATION BRACING

BERKELEY, CA.

MATERIAL: AEU 02.04.09

CODE: AEU 02.04.09

INPUT: DS 02.18.09

SHOP ISSUE

Herrick

HOLES: 13/16" U.N.O	DRAWN BY	AEU	DATE	01-20-2009	JOB	9891
PAINT: NONE	CHECKED BY	RA	DATE	02-03-2009	SHEET	101 B

SCALE: 1:12

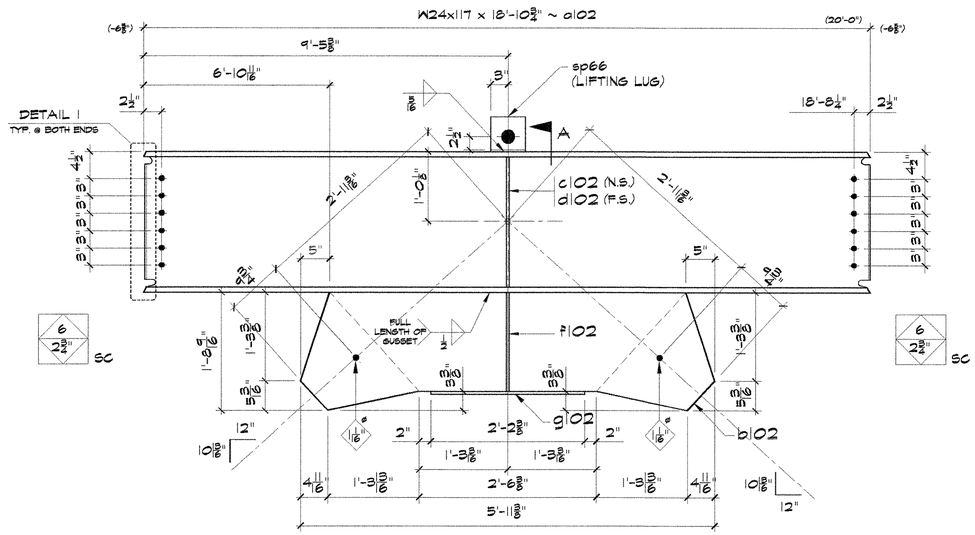

(ONE) BEAM ~ A102 1/A

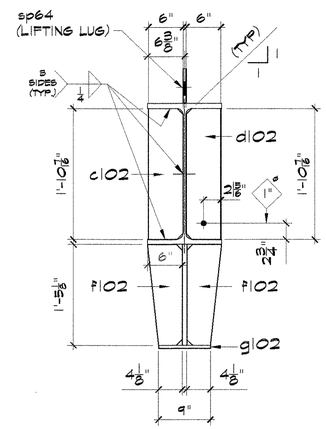

SECTION - A

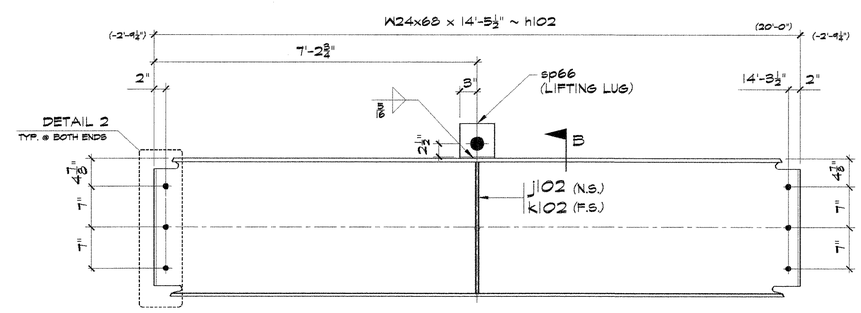

(ONE) BEAM ~ B102 1/A

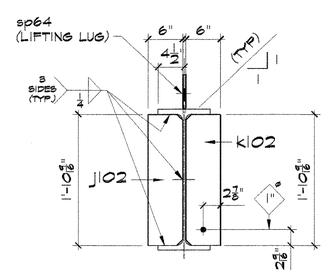

SECTION - B

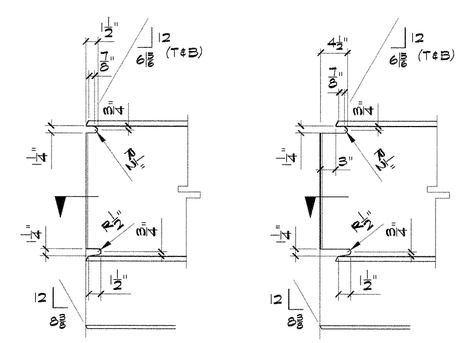

BILL OF MATERIALS

QTY.	DESCRIPTION	LENGTH FT	LENGTH INCHES	MARK	●	MTL GR	REMARKS		CODE	MO MTO
ONE	BEAM			A102	●					
ONE	W24X117	18	10¾	a102		28			F2E	901-3
ONE	PL ¾x20 9/16	5	11⅜	b102		2		D	S/H	901-21
ONE	PL ½x6	1	10 7/16	c102		1		P	N2CL=1	
ONE	PL ½x6	1	10 7/16	d102		1		P	N/H	
2	PL ½x6	1	5⅛	f102		1		P	N/S	
ONE	PL ½x9	2	2⅜	g102		1		P	Plain	
ONE	PL ½x6	0	6	sp66						
12	⅞Φ A490 SC	0	2¾	fp3723			w/ N&W			
12	⅞Φ A490	0	3	fp3730			w/ N&W			
2	⅞Φ A490	0	2½	fp3722			w/ N&W			
ONE	BEAM			B102	●					
ONE	W24X68	14	5½	h102		28			F2E	901-5
ONE	PL ½x6	1	10 5/16	j102		1		P	N2CL=1	
ONE	PL ½x6	1	10 5/16	k102		1		P	N/H	
ONE	PL ½x6	0	6	sp66						
6	⅞Φ A490 SC	0	2¾	fp3723			w/ N&W			
12	⅞Φ A490	0	3	fp3730			w/ N&W			
2	⅞Φ A490	0	2½	fp3722			w/ N&W			

REV	DATE	DESCRIPTION	BY	CHK
B	03/02/09	REVISED FOR FABRICATION	AEU	RN
A	02/20/09	REVISED PER SUBMITTAL MARK UP	AEU	

MTL. GR. DENOTES MATERIAL GRADE			
	1 = A36	5 = A572-42	6 = A500-B
	2 = A572-50	28 = A992-50	7 = A573-B

BEAMS

UNIVERSITY OF CALIFORNIA at BERKELEY

INTERNATIONAL HYBRID SIMULATION BRACING

BERKELEY , CA.

Herrick

MATERIAL: AEU 02.04.09

CODE: AEU 02.04.09

INPUT: DS 02.18.09

SHOP ISSUE

HOLES : 13/16" U.N.O.	DRAWN BY	AEU	DATE	01-20-2009	JOB	9893
PAINT : NONE	CHECKED BY	RA	DATE	02-03-2009	SHEET	102 B

SCALE : 1:12

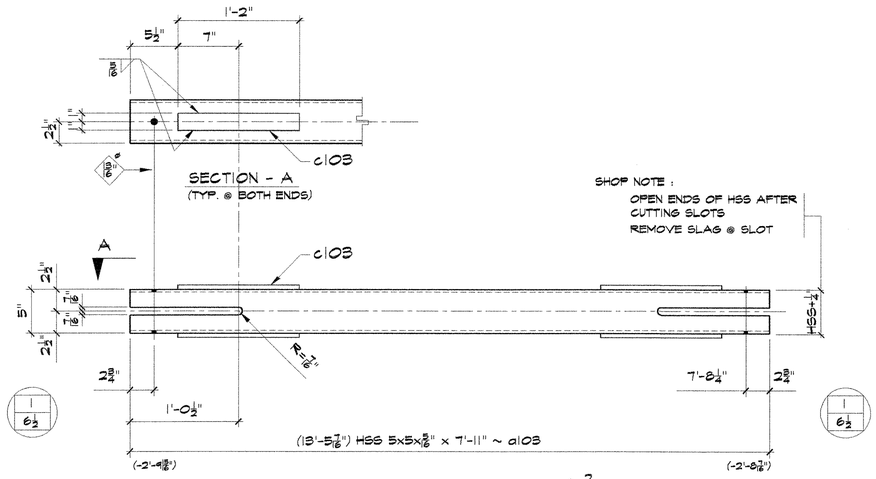

(2) HSS BRACE ~ A103

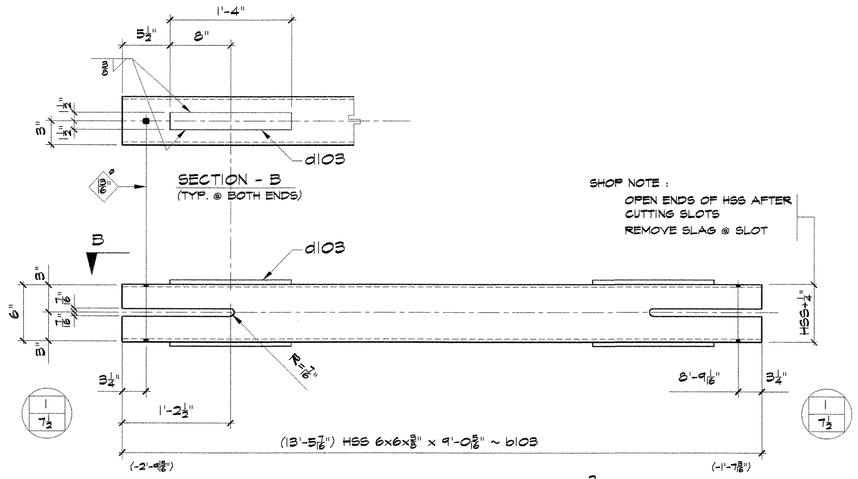

(2) HSS BRACE ~ B103

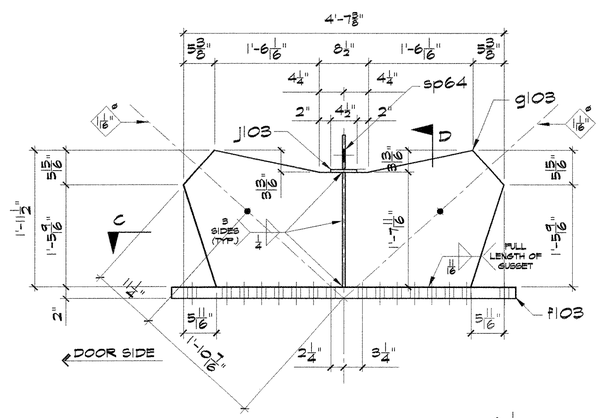

(ONE) GUSSET ASSY ~ C103

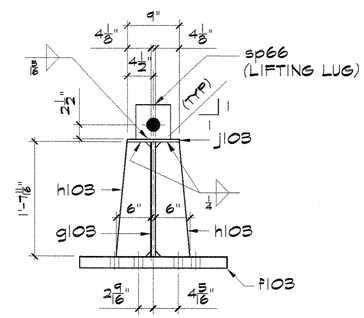

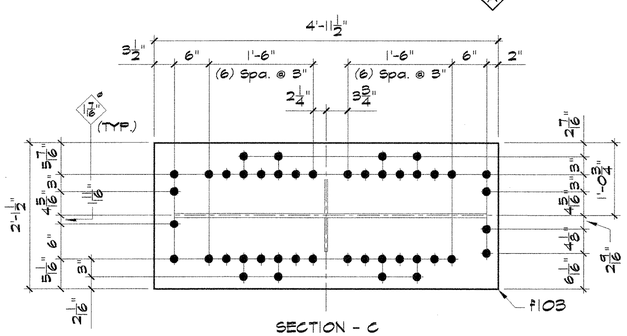

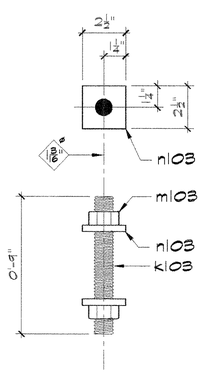

(112) ANCHOR BOLT ASSY ~ D103

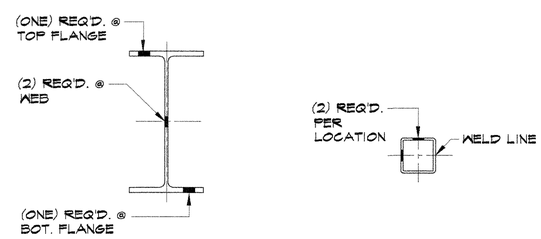

(4) REQ'D. FOR W12x96 ~ F103
(4) REQ'D. FOR W24x117 ~ G103
(4) REQ'D. FOR W24x68 ~ H103
(4) REQ'D. FOR HSS 6x6x3/8 ~ J103
(4) REQ'D. FOR HSS 5x5x3/8 ~ K103
(2) REQ'D. FOR 3/4" THICK PL ~ L103

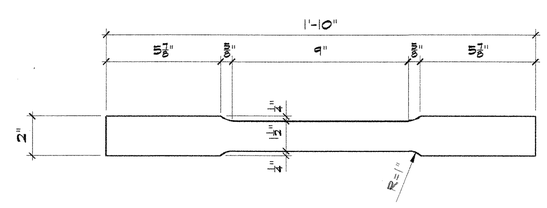

22-TENSION TEST SPECIMENS (COUPON)

BILL OF MATERIALS

	QTY.	DESCRIPTION	LENGTH FT	LENGTH INCHES	MARK	●	MTL GR	REMARKS	CODE		MO MTO
	2	HSS BRACE			A103	●			X		
	2	HSS 5x5x3/16	7	11	a103		6				901-9
	4	PL 5/8x2	1	2	c103		2		P	Plain	
	4	3/4Φ A307	0	6½	fp1662			w/ N&W			
	2	HSS BRACE			B103	●			X		
△	2	HSS 6x6x3/8	9	0 5/16	b103		6				901-7
	4	PL 5/8x3	1	4	d103		2		P	Plain	
	4	3/4Φ A307	0	7½	fp1672			w/ N&W			
	ONE	GUSSET ASSY			C103	●			X		
	ONE	PL 2x25½	4	11½	f103		2		D	H	901-13
	ONE	PL 3/4x23½	4	7 3/8	g103		2		D	S/H	901-19
	2	PL ½x6	1	7 5/8	h103		1		P	S/N	
	ONE	PL ½x4½	0	9	j103		1		P	Plain	
△	ONE	PL ½x6	0	6	sp66						
△	112	ANCHOR BOLT ASSY			D103	●		BUYOUT	X		BO-103
△	112	1⅛"Φ ROD	0	9	k103		10	(ALL THREAD) A193 Gr B7			
△	224	PL 3/8x2½	0	2½	n103		2	A572-50 SQ. WASHER	PL		
△	224	1⅛" A194 NUT			m103		45	A194-2H			
	4	COUPONS	1	10	F103	●	28	FAB FROM W12x96			901-1
	4	COUPONS	1	10	G103	●	28	FAB FROM W24x117			901-3
	4	COUPONS	1	10	H103	●	28	FAB FROM W24x68			901-5
△	4	COUPONS	1	10	J103	●	6	FAB FROM HSS 6x6			901-7
△	4	COUPONS	1	10	K103	●	6	FAB FROM HSS 5x5			901-9
△	2	COUPONS	1	10	L103	●	2	FAB FROM GUSSET PL			901-19
	ONE	HSS 5x5x3/16	40	0	M103	●	6	PLAIN MAT. (SHIP LOOSE)			901-10
	ONE	HSS 6x6x3/8	40	0	N103	●	6	PLAIN MAT. (SHIP LOOSE)			901-8

REV	DATE	DESCRIPTION	BY	CHK
△	03/02/09	REVISED FOR FABRICATION	AEU	RN
△	02/20/09	REVISED PER SUBMITTAL MARK UP	AEU	

MTL. GR. DENOTES MATERIAL GRADE: 1 = A36; 2 = A572-50; 5 = A572-42; 6 = A500-B; 28 = A992-50; 7 = A57B-B

HSS BRACING / BASE GUSSET ASSY./ SPECIMEN
UNIVERSITY OF CALIFORNIA at BERKELEY
INTERNATIONAL HYBRID SIMULATION BRACING
BERKELEY , CA.

MATERIAL: AEU 02.04.09
CODE: AEU 02.04.09
INPUT: DS 02.18.09
SHOP ISSUE

Herrick

HOLES : 1 7/16" U.N.O.	DRAWN BY	AEU	DATE	01-20-2009	JOB	9895
PAINT : NONE	CHECKED BY	RA	DATE	02-03-2009	SHEET	103 △

SCALE : 1:12

TCBF-B-2 and TCBF-B-3 Shop Drawings
(UC Berkeley)

Filename: Brace-Replace_20090527_Specimen-Only.dwg Plotted: 5/27/2009 Plot Device: Adobe PDF Page Setup: ----
Plotted by: Jwlai

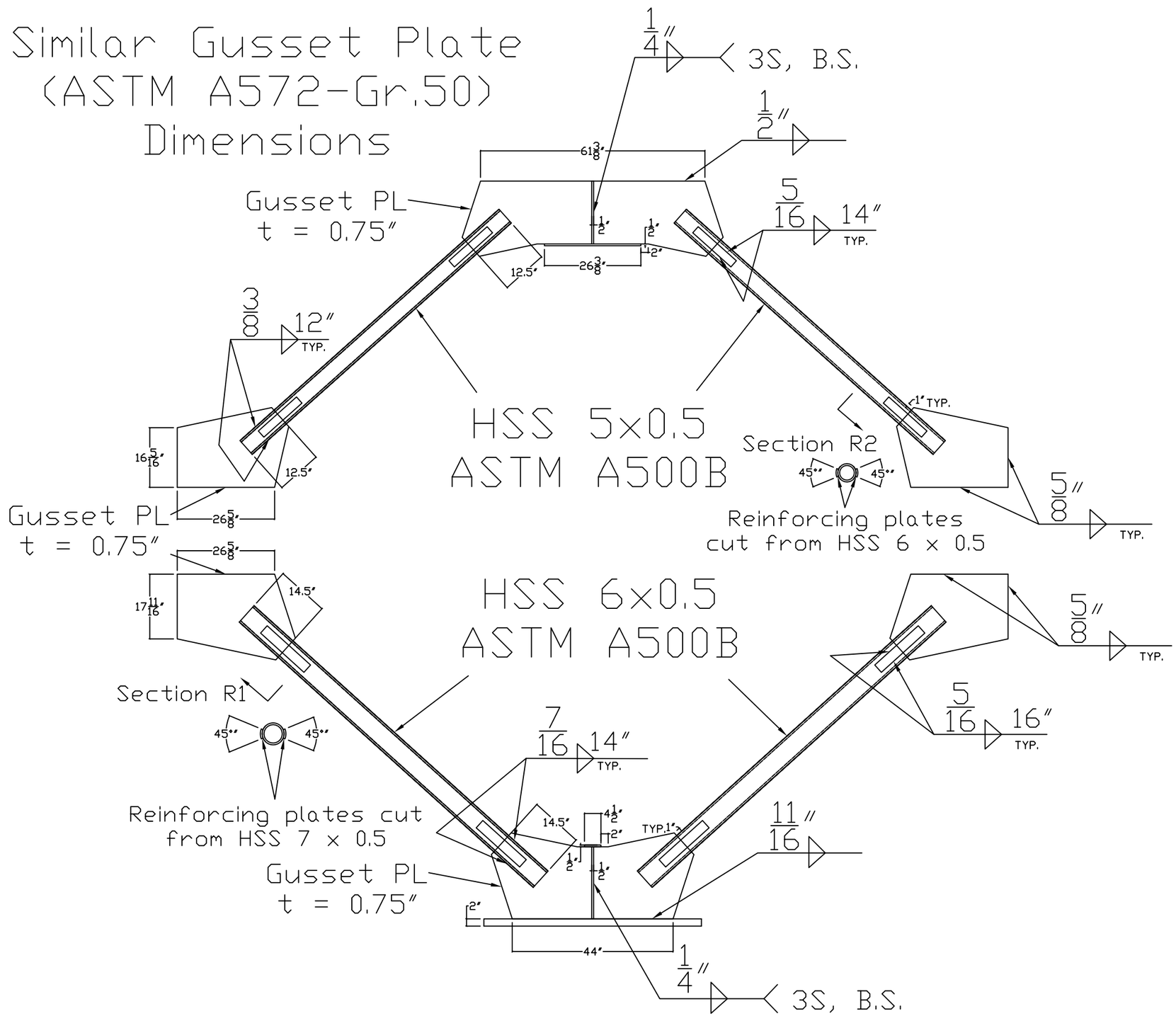

University of California at Berkeley

International Hybrid Simulation of Tomorrow's Braced Steel Frame Structures

REV	REVISION	DATE

revisions

project
SCBF (HSS-Round)
Phase-01
1301 South 46th Street
Richmond, California, 94804

Address
UC Berkeley
Richmond Field Station
Building 484, Structural Research Lab

content
Specimen Detail
Framing Elevations

drawn by: Jiun-Wei Lai (Adrian)
checked by: Jiun-Wei Lai (Adrian)
date: May. 2009
drawing no.
R1.01

Filename: Brace-Replace_20090527_Specimen-Only.dwg Plotted: 5/27/2009 Plot Device: Adobe PDF Page Setup: ----
Plotted by: Jwlai

Similar Gusset Plate (ASTM A572-Gr.50) Dimensions

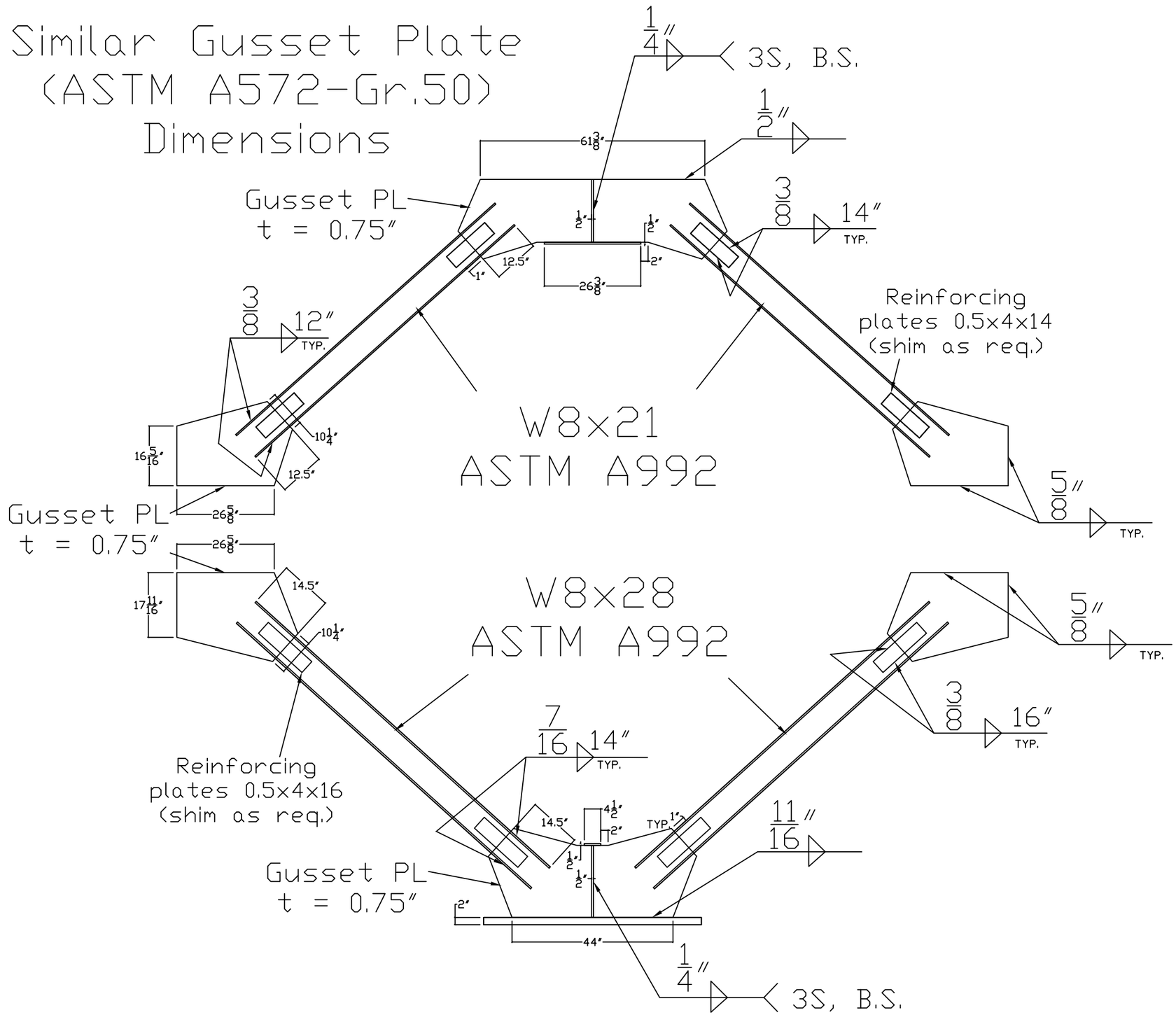

University of California at Berkeley

International Hybrid Simulation of Tomorrow's Braced Steel Frame Structures

REV	REVISION	DATE

revisions

project
SCBF (WF)
Phase-01
1301 South 46th Street
Richmond, California, 94804

Address
UC Berkeley
Richmond Field Station
Building 484, Structural Research Lab

content
Specimen Detail
Framing Elevations

drawn by: Jiun-Wei Lai (Adrian)
checked by: Jiun-Wei Lai (Adrian)
date: May. 2009
drawing no.
W1.01

TCBF-B-2, TCBF-B-3 and TCBF-B-4 Shop Drawings (Herrick Steel)

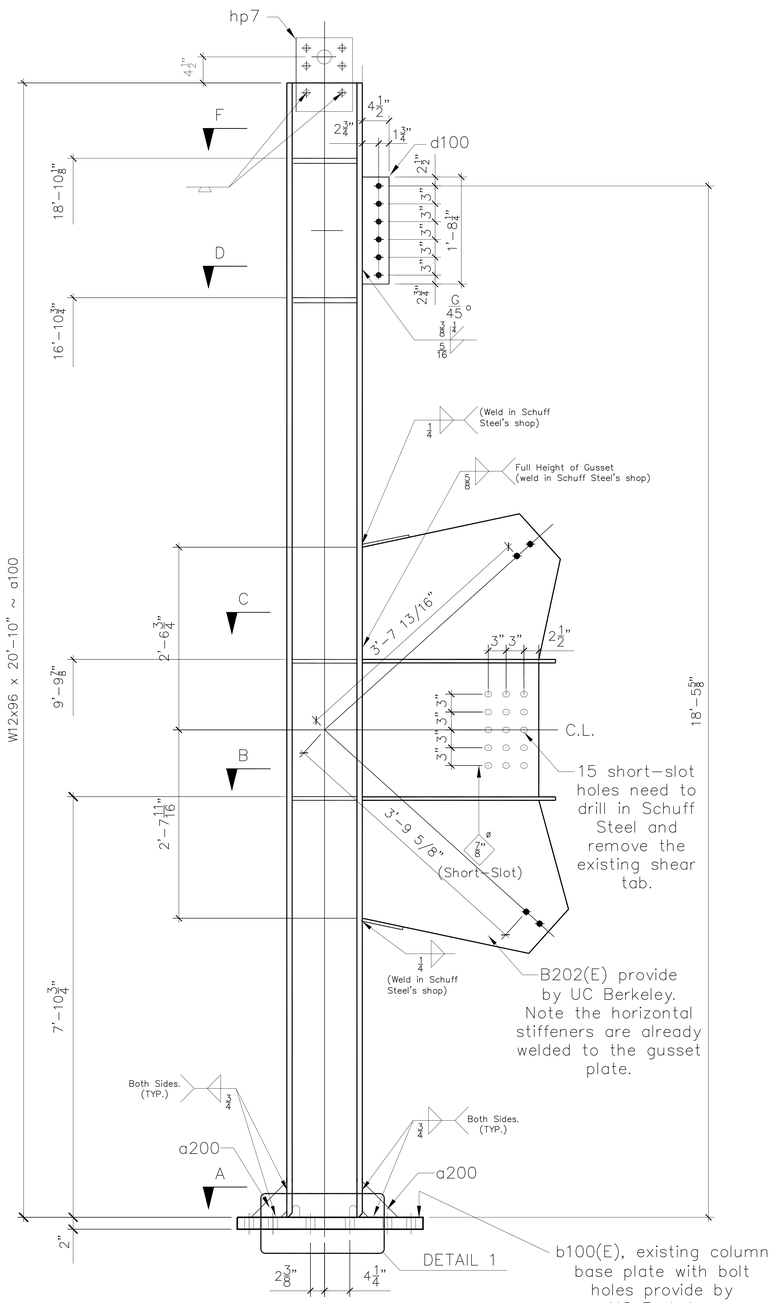

(ONE) COLUMN ~ A100

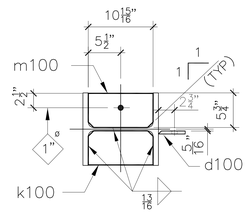

SECTION – F

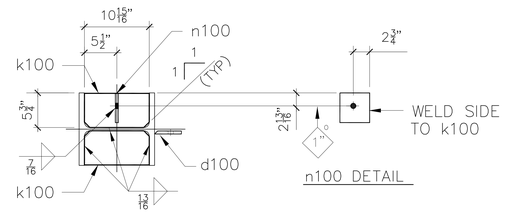

n100 DETAIL

SECTION – D

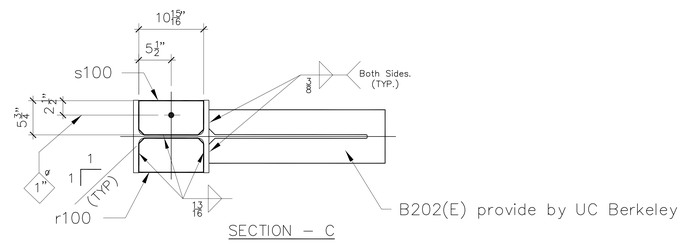

SECTION – C

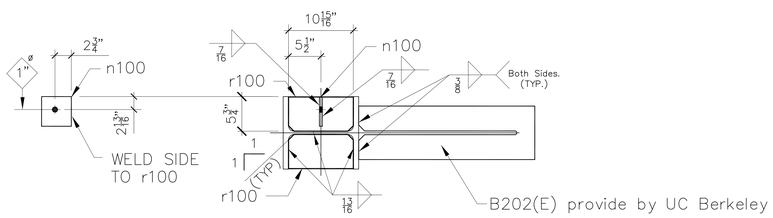

SECTION – B

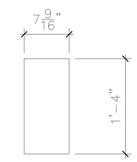

q100 DETAIL

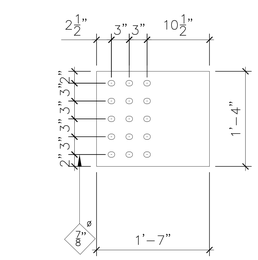

(Short-Slot Holes)

g100 DETAIL

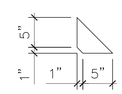

a200 DETAIL

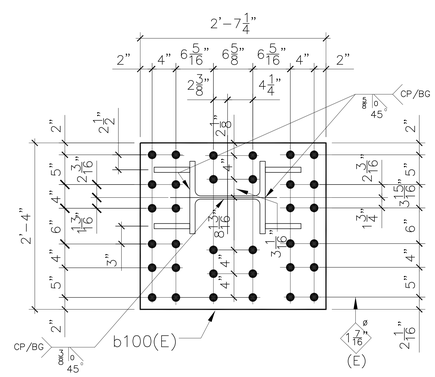

SECTION – A

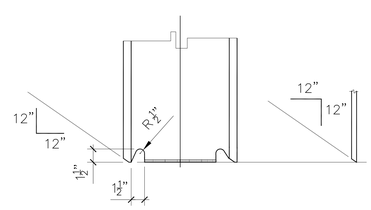

DETAIL 1

BILL OF MATERIALS

QTY.	DESCRIPTION	LENGTH FT	LENGTH INCHES	MARK	●	MTL GR	REMARKS	CODE		MO MTO
ONE	COLUMN			A100	●					
ONE	W12 X 96	20	10	a100		28			P1E, F1E	901-1
ONE	PL 2x28	2	7 1/4	b100		2	Provide by UCB	D	H	901-11
4	PL 7/8 x 6	0	6	a200		2		D	S/H	901-17
ONE	PL 1/2 x 4 1/2	1	8 1/4	d100		2		P	H	
4	PL 1/2 x 16	1	7	g100		1		P	H	
ONE	PL 3/4 x 9 1/2	1	2 3/4	hp7		2		P	Plain	
3	PL 7/8 x 5 3/4	0	10 15/16	k100		2		D	N2CL=1	
ONE	PL 7/8 x 5 3/4	0	10 15/16	m100		2		D	H/N	
2	PL 1/2 x 5	0	5	n100		1		P	H	
4	PL 1/8 x 7 9/16	1	4	q100		1	Shim Plate	P	H	
3	PL 5/8 x 5 3/4	0	10 15/16	r100		2		P	N2CL=1	
ONE	PL 5/8 x 5 3/4	0	10 15/16	s100		2		P	H/N	
ONE	Gusset Plate Assembly			B202			Provide by UCB			
30	∅ 7/8" - A490 SC	0	3 1/4							
2	∅ 7/8" - A490 SC	0	2 1/2							
2	∅ 7/8" - A490 SC	0	3							

REV	DATE	DESCRIPTION	BY	CHK

MTL. GR. DENOTES MATERIAL GRADE			
	1 = A36 2 = A572-50	5 = A572-42 28 = A992-50	6 = A500-B 7 = A573-B

EAST SIDE COLUMN
UNIVERSITY OF CALIFORNIA, BERKELEY
INTL. HYBRID SIMULATION OF TCBF
BERKELEY , CA.

MATERIAL
CODE
INPUT
SHOP ISSUE

HOLES : 15/16" U.N.O.	DRAWN BY		DATE	09-21-2010	JOB	TCBF-B
PAINT : NONE	CHECKED BY		DATE	09-21-2010	SHEET	100

SCALE : 1:12

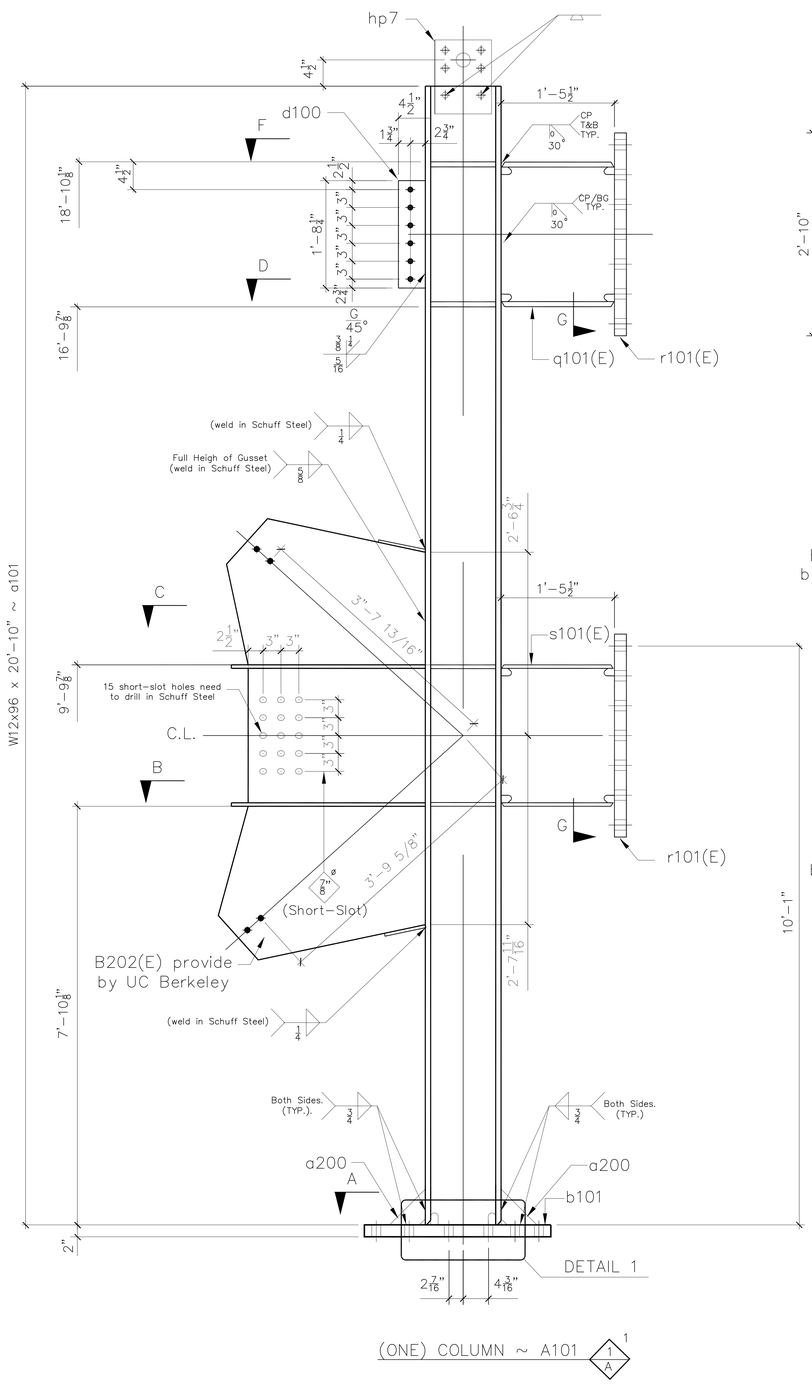

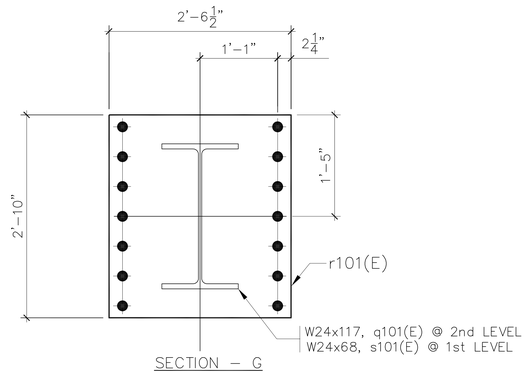

SECTION – G

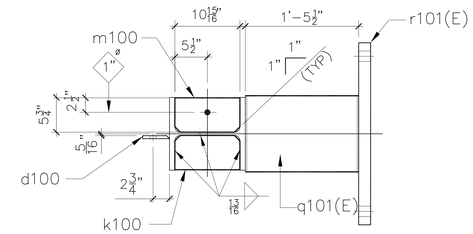

SECTION – F

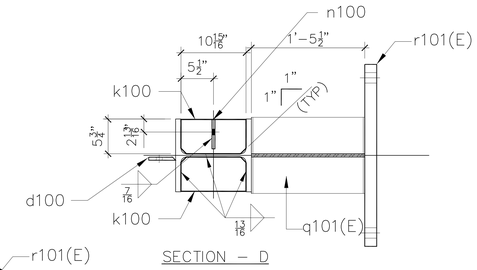

SECTION – D

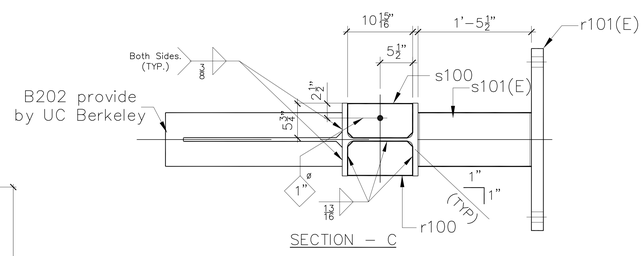

SECTION – C

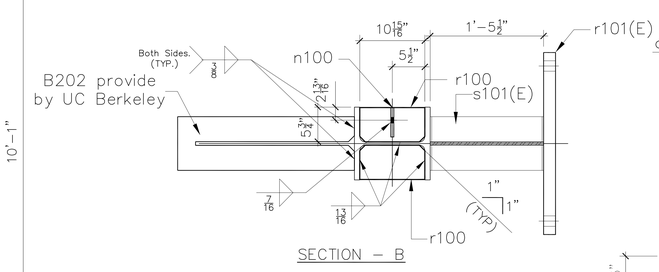

SECTION – B

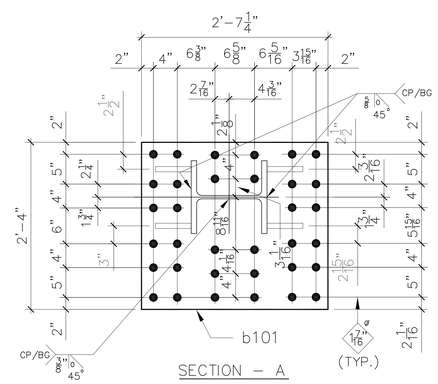

SECTION – A

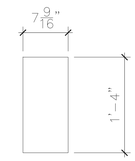

q100 DETAIL

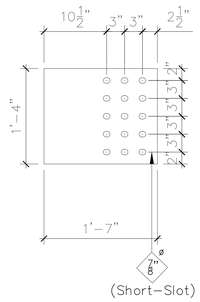

q100 DETAIL

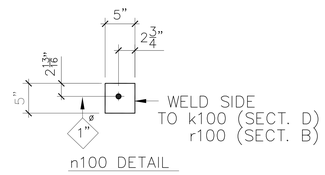

n100 DETAIL

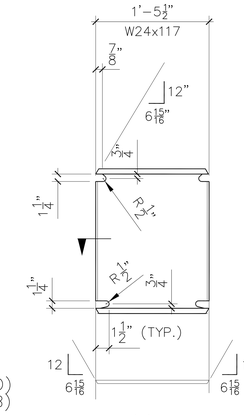

q101(E) DETAIL

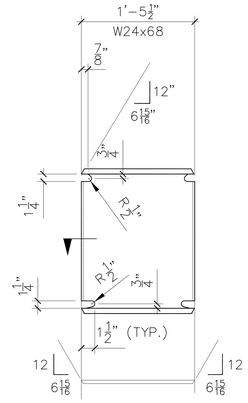

s101(E) DETAIL

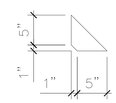

a200 DETAIL

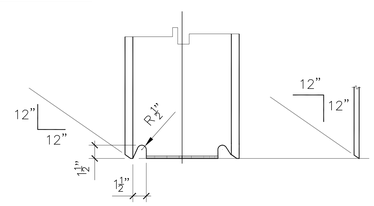

DETAIL 1

BILL OF MATERIALS

QTY.	DESCRIPTION	LENGTH FT	LENGTH INCHES	MARK	●	MTL GR	REMARKS		CODE	MO MTO
ONE	COLUMN			A101	●					
ONE	W12 x 96	20	10	a101		28			P1E, F1E	901-1
ONE	PL 2 x 28	2	7 1/4	b101		2		D	H	901-11
ONE	PL 1/2 x 4 1/2	1	8 1/4	d100		2		P	H	
4	PL 1/2 x 16	1	7	g100		1		P	H	
ONE	Gusset Plate Assembly			B202			Provide by UCB			
3	PL 7/8 x 5 3/4	0	10 15/16	k100		2		D	H/N	
ONE	PL 7/8 x 5 3/4	0	10 15/16	m100		2		D	N2CL=1	
2	PL 1/2 x 5	0	5	n100		1		P	H	
ONE	PL 3/4 x 9 1/2	1	2 3/4	hp7		2		P	H	
ONE	W24 x 117	1	6	q101		28	Provide by UCB		P2E	901-4
2	PL 2 x 30 1/2	2	10	r101		2	Provide by UCB	D	H	901-15
ONE	W24 x 68	1	6	s101		28	Provide by UCB		P2E	901-6
4	PL 1/8 x 7 9/16	1	4	q100		1	Shim Plate	P	H	
ONE	PL 5/8 x 5 3/4	0	10 15/16	s100		2		D	H/N	
3	PL 5/8 x 5 3/4	0	10 15/16	r100		2		D	N2CL=1	
4	PL 7/8 x 6	0	6	a200		2				
30	Ø 7/8" - A490 SC	0	3 1/4							
2	Ø 7/8" - A490 SC	0	2 1/2							
2	Ø 7/8" - A490 SC	0	3							

REV	DATE	DESCRIPTION	BY	CHK

MTL. GR. DENOTES MATERIAL GRADE			
	1 = A36	5 = A572-42	6 = A500-B
	2 = A572-50	28 = A992-50	7 = A573-B

WEST SIDE COLUMN
UNIVERSITY OF CALIFORNIA, BERKELEY
INTL. HYBRID SIMULATION OF TCBF
BERKELEY , CA.

MATERIAL
CODE
INPUT
SHOP ISSUE

HOLES : 15/16" U.N.O	DRAWN BY		DATE	09-21-2010	JOB	TCBF-B
PAINT : NONE	CHECKED BY		DATE	09-21-2010	SHEET	101

SCALE : 1:12

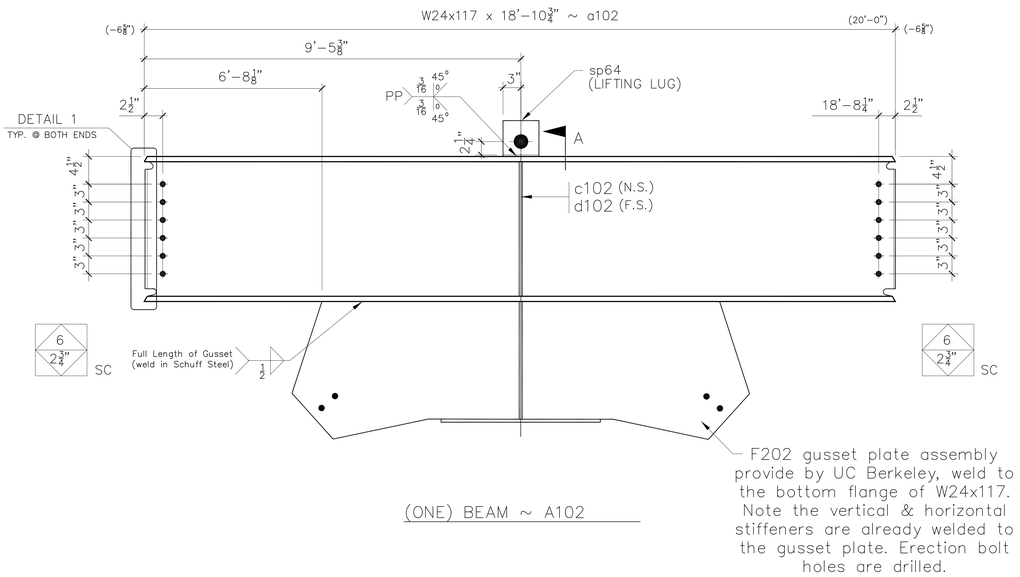

(ONE) BEAM ~ A102

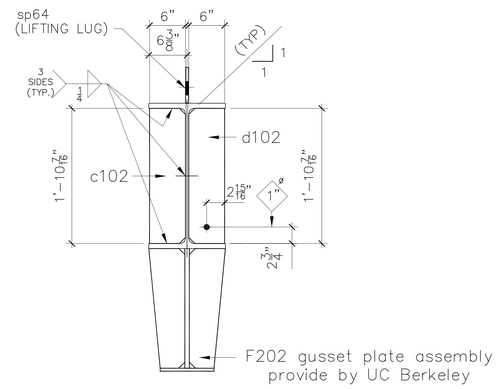

SECTION – A

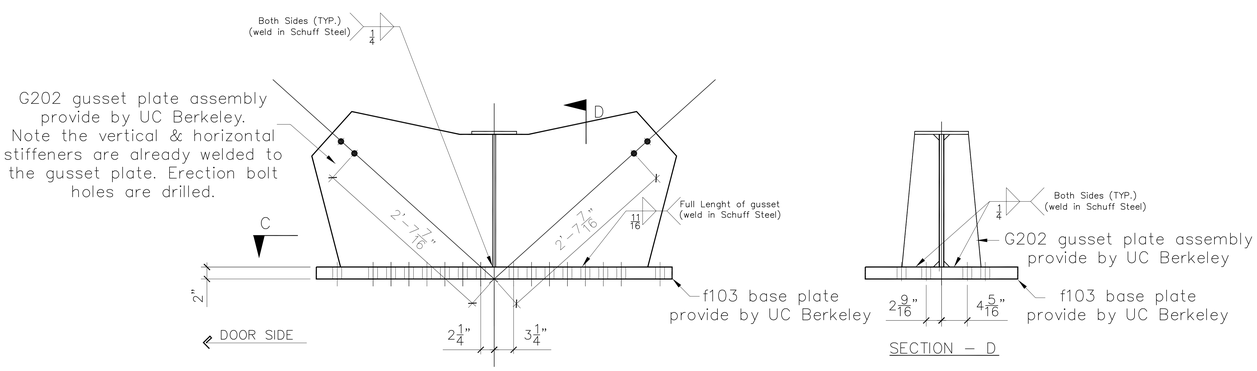

(ONE) GUSSET ASSY ~ C103

SECTION – D

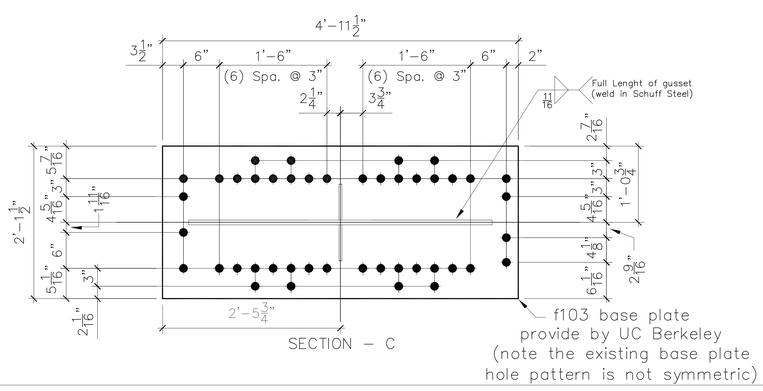

SECTION – C

CP12F, CP12W, CP24F & CP24W Detail

Cut from W12X96 and W24X117 (one from web and one from flange)

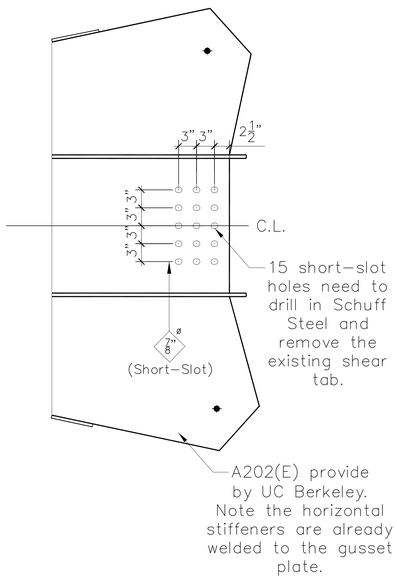

(TWO) GUSSET ASSY. ~A202(E)

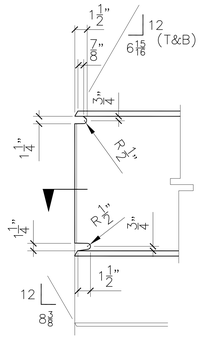

DETAIL 1

BILL OF MATERIALS

QTY.	DESCRIPTION	LENGTH FT	LENGTH INCHES	MARK	●	MTL GR	REMARKS	CODE		MO MTO
ONE	BEAM			A102	●					
ONE	W24 X 117	18	10 3/4	a102		28			P2E	901-3
ONE	PL 1/2 x 6	1	10 7/16	c102		1		P	N2CL=1	
ONE	PL 1/2 x 6	1	10 7/16	d102		1		P	N/H	
ONE	PL 1/2 x 6	0	6	sp64		1				
12	∅7/8" - A490 SC	0	2 3/4				w/ N&W			
2	∅7/8" - A490 SC	0	2 1/2				w/ N&W			
ONE	Gusset Plate			F202			Provide by UCB			
ONE	2" Base Plate			f103			Provide by UCB			
ONE	Gusset Plate			G202			Provide by UCB			
TWO	Gusset Plate			A202			Provide by UCB			
ONE	W24 X 117(Flange)	1	11	CP24F		28	Test Coupon			
ONE	W24 X 117(Web)	1	11	CP24W		28	Test Coupon			
ONE	W12 X 96(Flange)	1	11	CP12F		28	Test Coupon			
ONE	W12 X 96(Web)	1	11	CP12W		28	Test Coupon			

REV	DATE	DESCRIPTION	BY	CHK

MTL. GR. DENOTES MATERIAL GRADE	1 = A36 2 = A572-50	5 = A572-42 28 = A992-50	6 = A500-B 7 = A573-B

BEAMS
UNIVERSITY OF CALIFORNIA, BERKELEY
INTL. HYBRID SIMULATION OF TCBF
BERKELEY , CA.

MATERIAL
CODE
INPUT
SHOP ISSUE

HOLES : 15/16" U.N.O.	DRAWN BY		DATE	09-21-2010	JOB	TCBF-B
PAINT : NONE	CHECKED BY		DATE	09-21-2010	SHEET	102

SCALE : 1:12

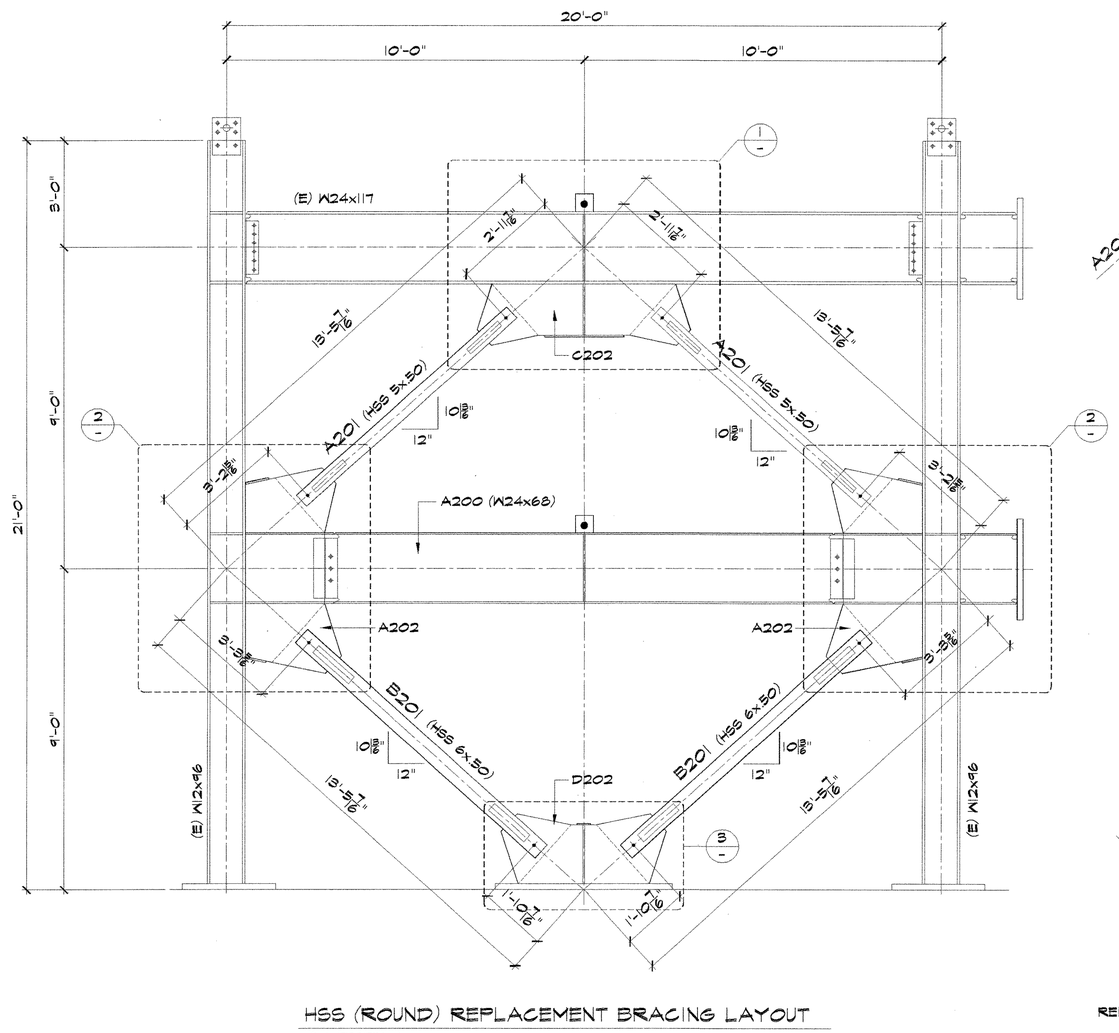

HSS (ROUND) REPLACEMENT BRACING LAYOUT

(1st TESTING)

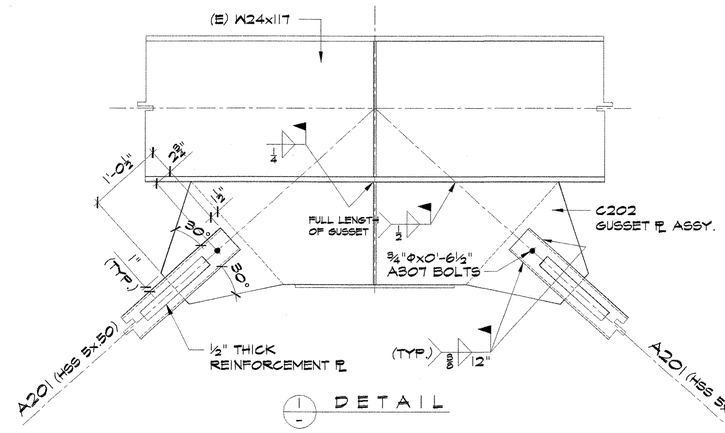

1 DETAIL

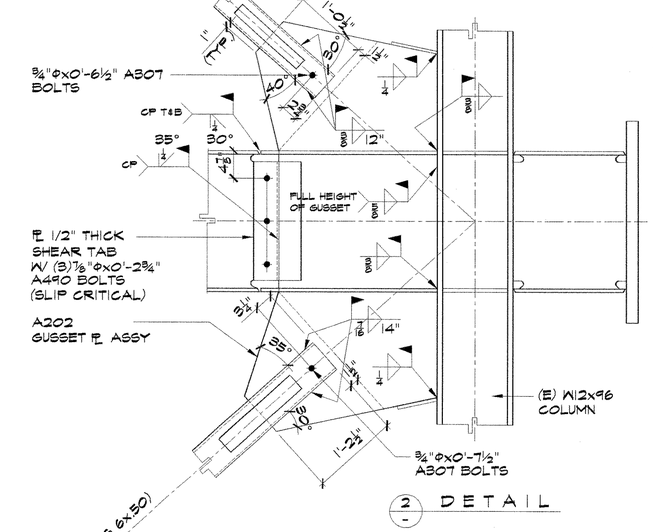

2 DETAIL

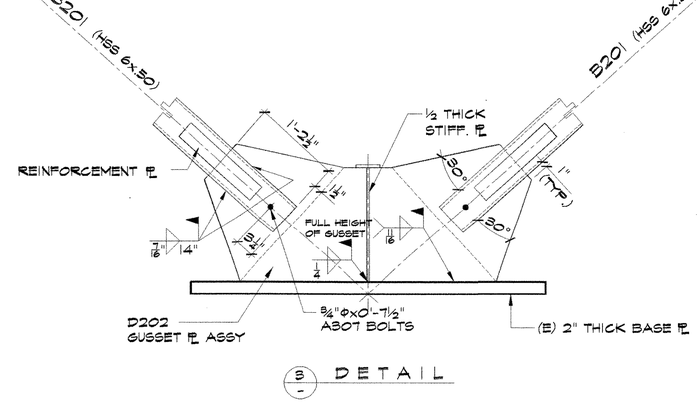

3 DETAIL

REV	DATE	DESCRIPTION	BY	CHK

MTL. GR. DENOTES MATERIAL GRADE	1 = A36	5 = A572-42	6 = A500-B
	2 = A572-50	28 = A992-50	7 = A513-B

UNIVERSITY OF CALIFORNIA at BERKELEY

INTERNATIONAL HYBRID SIMULATION BRACING

SPECIMEN BRACE REPLACEMENT (HSS 5x.50 & HSS 6x.50)

BERKELEY, CA.

MATERIAL

CODE

INPUT

SHOP ISSUE

Herrick

HOLES :	DRAWN BY	ABU	DATE	08-10-2009	JOB	9890
PAINT :	CHECKED BY	RA	DATE	08-20-2009	SHEET	E1A

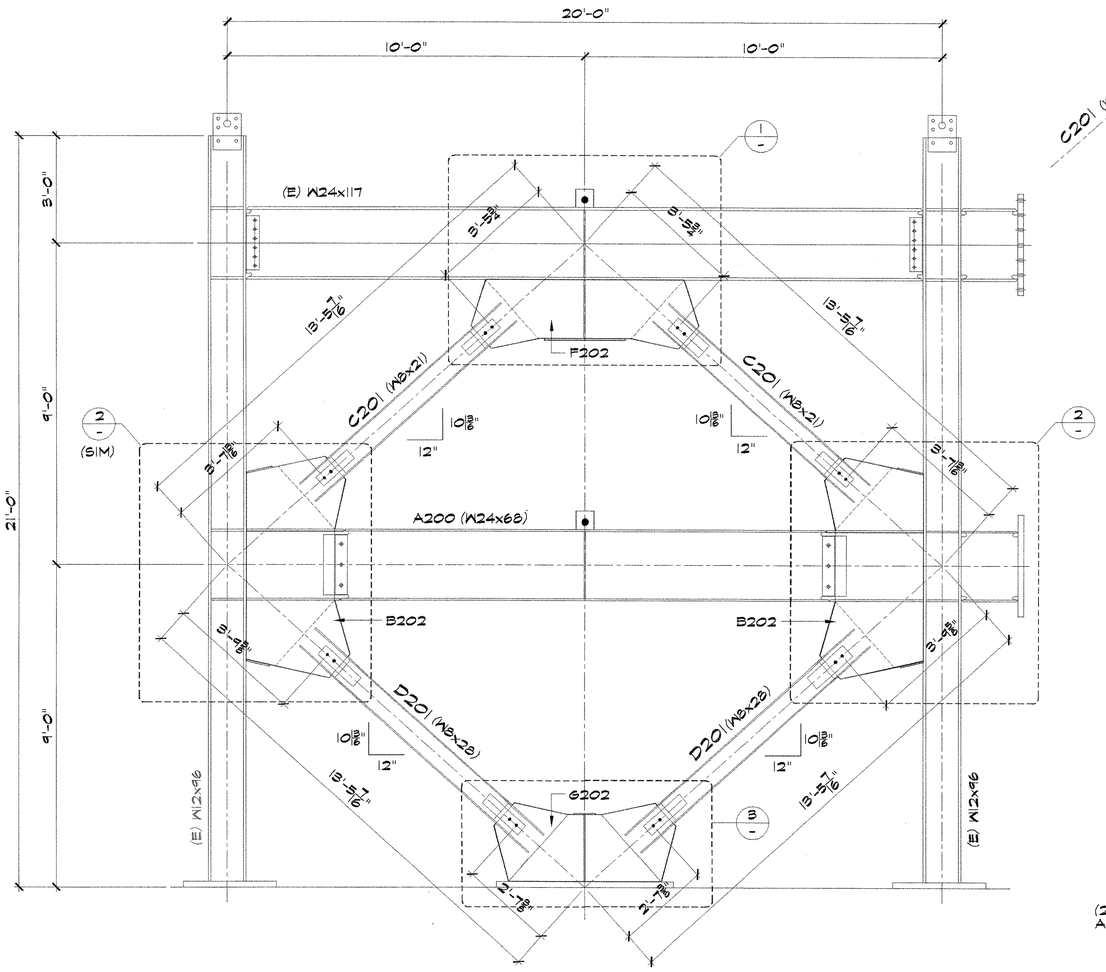

W8 REPLACEMENT BRACING LAYOUT
(2nd TESTING)

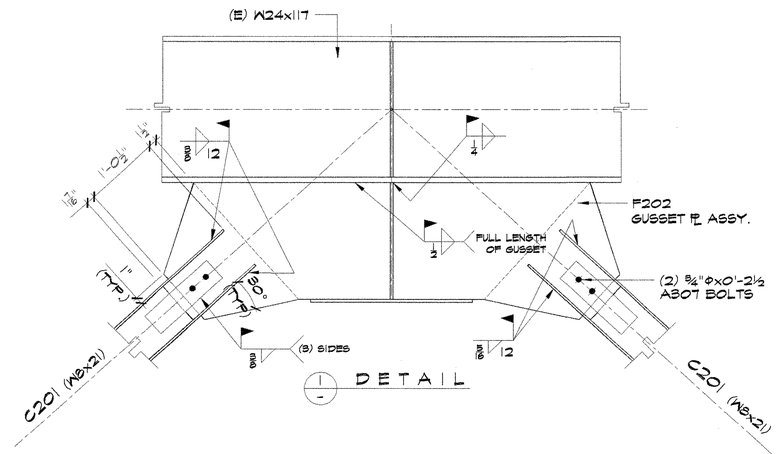

1 DETAIL

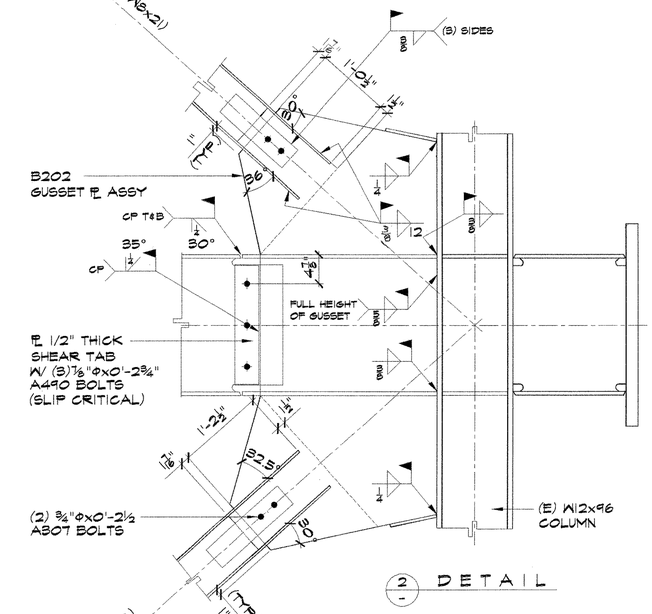

2 DETAIL

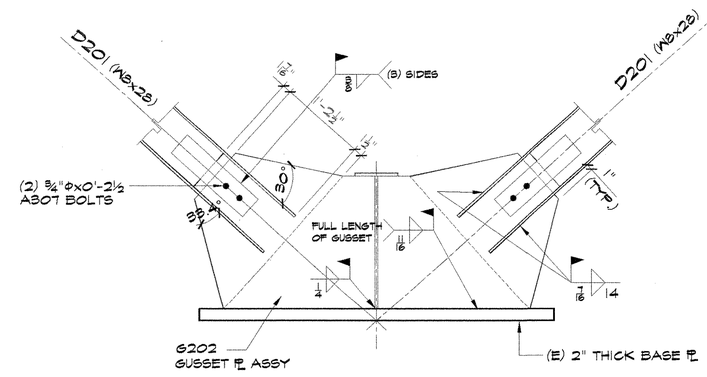

3 DETAIL

REV	DATE	DESCRIPTION	BY	CHK

MTL. GR. DENOTES MATERIAL GRADE	1 = A36	5 = A572-42	6 = A500-B
	2 = A572-50	28 = A992-50	7 = A572-B

UNIVERSITY OF CALIFORNIA at BERKELEY
INTERNATIONAL HYBRID SIMULATION BRACING
SPECIMEN BRACE REPLACEMENT (W8x21 & W8x28)
BERKELEY, CA.

MATERIAL
CODE
INPUT
SHOP ISSUE

Herrick

HOLES :	DRAWN BY	AEU	DATE	07-10-2009	JOB	9890
PAINT :	CHECKED BY	RA	DATE		SHEET	E1B

SCALE : 1/2"=1'

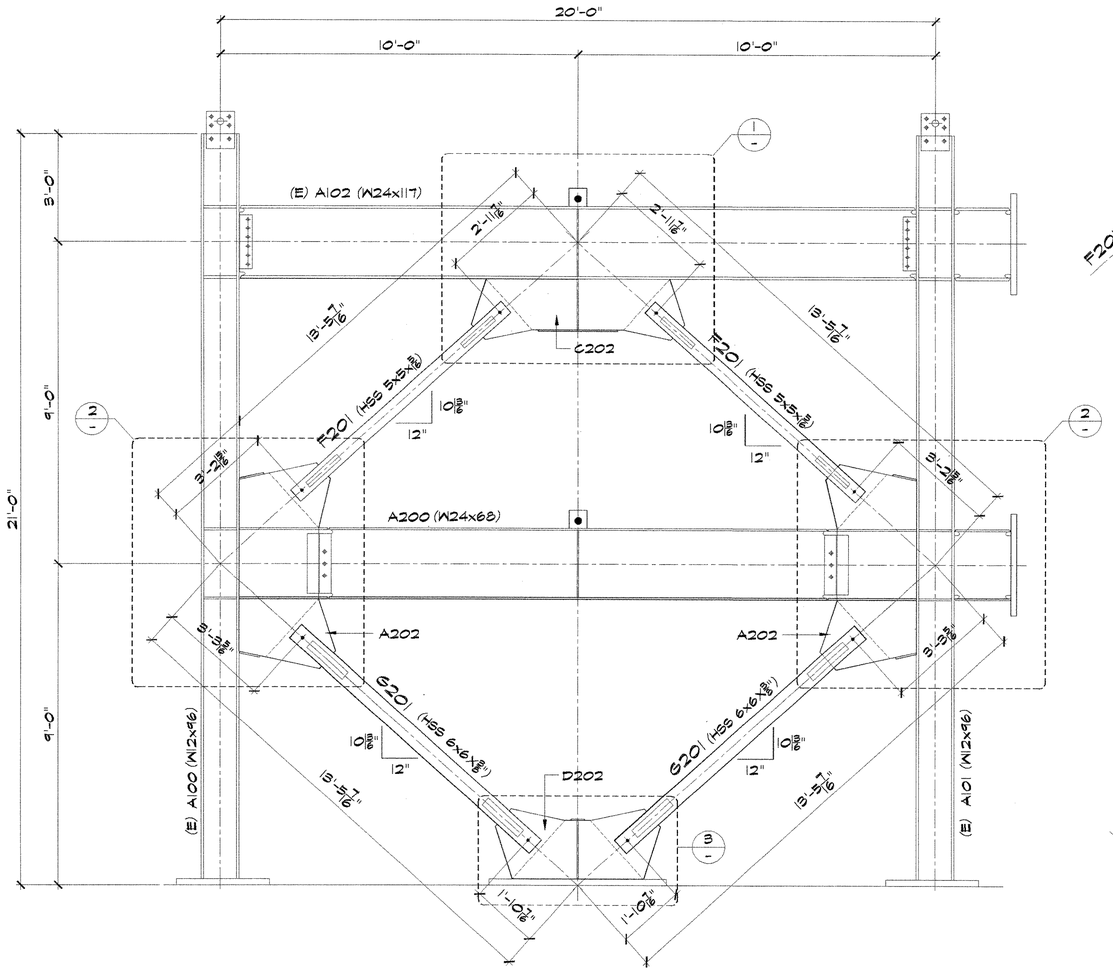

HSS (SQUARE) REPLACEMENT BRACING LAYOUT

(3rd TESTING)

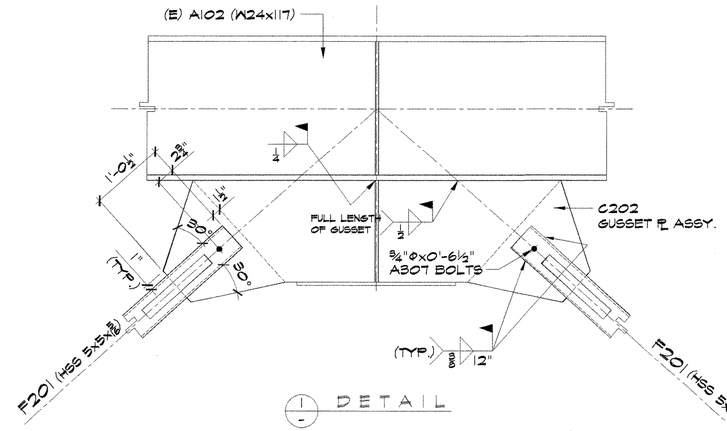

1 DETAIL

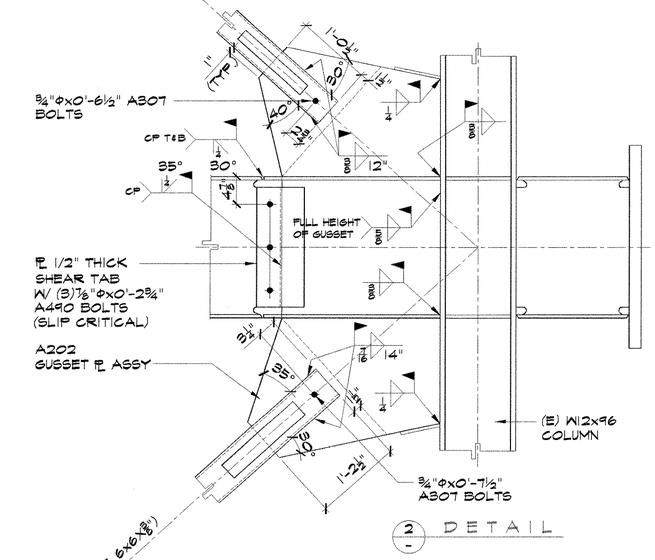

2 DETAIL

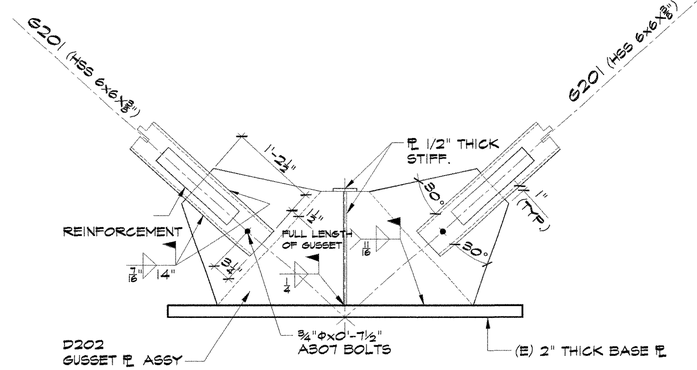

3 DETAIL

REV	DATE	DESCRIPTION	BY	CHK

MTL. GR. DENOTES MATERIAL GRADE	1 = A36 2 = A572-50	5 = A572-42 28 = A992-50	6 = A500-B 7 = A573-B

UNIVERSITY OF CALIFORNIA at BERKELEY

INTERNATIONAL HYBRID SIMULATION BRACING

SPECIMEN BRACE REPLACEMENT (HSS 5x5 & HSS 6x6)

BERKELEY, CA.

MATERIAL

CODE

INPUT

SHOP ISSUE

Herrick

HOLES :	DRAWN BY	AEU	DATE	08-10-2009	JOB	9890
PAINT :	CHECKED BY	RA	DATE	08-20-2009	SHEET	E1C

SCALE 1/2"=1'-0"

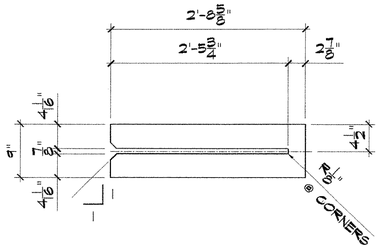

PL 5/8 x 9 x 2'-8 5/8 pl001

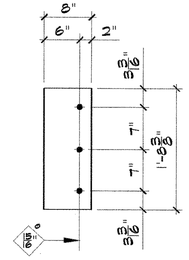

PL 1/2 x 8 x 1'-8 5/8 pl002

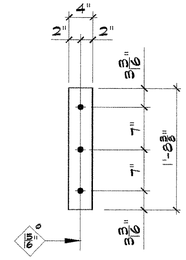

PL 1/8 x 4 x 1'-8 5/8 pl003

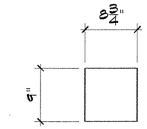

PL 1/2 x 8 3/4 x 0'-9 pl004

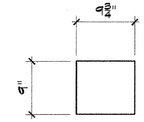

PL 1/2 x 9 x 0'-9 3/4 pl005

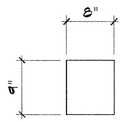

PL 1/2 x 8 x 0'-9 pl006

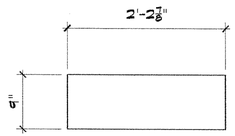

PL 1/2 x 9 x 2'-2 7/8 pl007

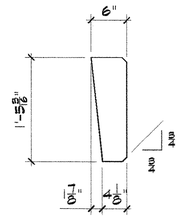

PL 1/2 x 6 x 1'-5 5/16 pl008

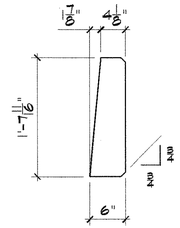

PL 1/2 x 6 x 1'-7 11/16 pl009

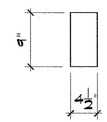

PL 1/2 x 4 1/2 x 0'-9 pl010

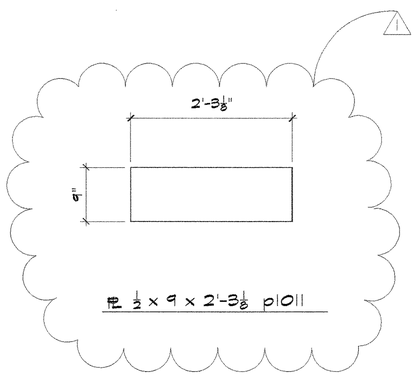

PL 1/2 x 9 x 2'-3 1/8 pl011

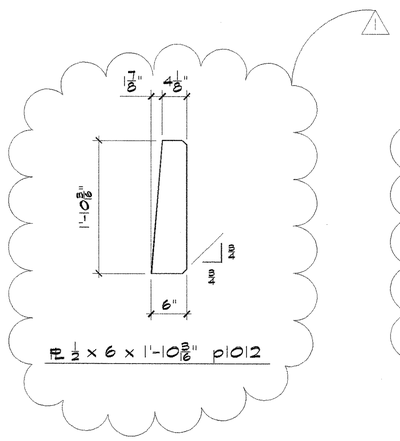

PL 1/2 x 6 x 1'-10 3/16" pl012

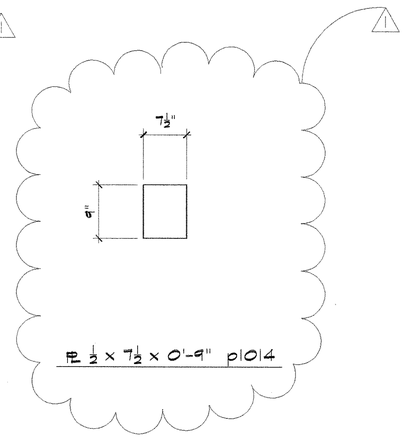

PL 1/2 x 7 1/2 x 0'-9" pl014

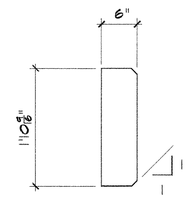

PL 1/2 x 6 x 1'-10 3/8 pl015

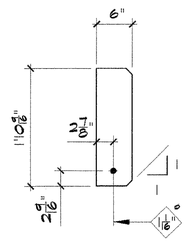

PL 1/2 x 6 x 1'-10 3/16 pl016

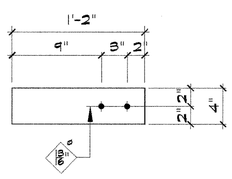

PL 1/2 x 4 x 1'-2 pl017

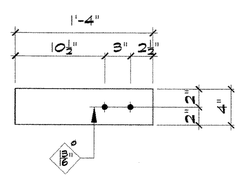

PL 1/2 x 4 x 1'-4 pl019

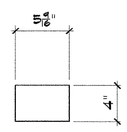

PL 1/4 x 4 x 0'-5 9/16 pl018

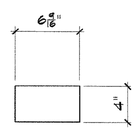

PL 3/16 x 4 x 0'-6 9/16 pl020

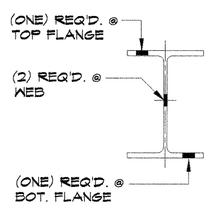

(4) REQ'D. FOR W8x21	aa204
(4) REQ'D. FOR W8x28	ab204
(4) REQ'D. FOR W24x68	ac204

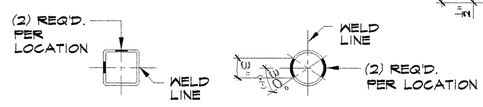

(4) REQ'D. FOR HSS 6x0.50 (ROUND)	ad204
(4) REQ'D. FOR HSS 5x0.50 (ROUND)	af204
(4) REQ'D. FOR HSS 6x6x3/8	ag204
(4) REQ'D. FOR HSS 5x5x3/16	ah204
(2) REQ'D. FOR 3/4 THICK PL	aj204

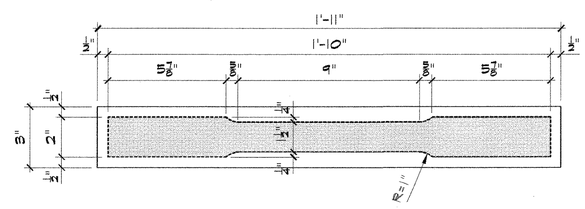

30-TENSION TEST SPECIMENS (COUPON)

NOTE :
SHADED PORTION REFLECTS COUPON AFTER MACHINING IS DONE PER DIMENSION SHOWN. MACHINING IS BY OTHERS.

BILL OF MATERIALS

QTY	DESCRIPTION	LENGTH FT	LENGTH INCHES	MARK	●	MTL GR	REMARKS		CODE	MO MTO
	PL 5/8x9	2	8 5/8	pl001		2		P	S/N	
	PL 1/2x8	1	8 5/8	pl002		2		P	H	
	PL 1/8x4	1	8 5/8	pl003		1		P	H	
	PL 1/2x8 3/4	0	9	pl004		1		P	PLAIN	
	PL 1/2x9	0	9 3/4	pl005		1		P	PLAIN	
	PL 1/2x8	0	9	pl006		1		P	PLAIN	
	PL 1/2x9	2	2 7/8	pl007		1		P	PLAIN	
	PL 1/2x6	1	5 5/16	pl008		1		P	S/N	
	PL 1/2x6	1	7 11/16	pl009		1		P	S/N	
	PL 1/2x4 1/2	0	9	pl010		1		P	PLAIN	
	PL 1/2x9	2	3 1/8	pl011		1		P	PLAIN	
	PL 1/2x6	1	10 3/16	pl012		1		P	S/N	
	PL 1/2x7 1/2	0	9	pl014		1		P	PLAIN	
	PL 1/2x6	1	10 9/16	pl015		1		P	N2CL=1	
	PL 1/2x6	1	10 9/16	pl016		1		P	H/N	
	PL 1/2x4	1	2	pl017		2		P	H	
	PL 1/4x4	0	5 9/16	pl018		1		P	PLAIN	
	PL 1/2x4	1	4	pl019		2		P	H	
	PL 3/16x4	0	6 9/16	pl020		1		P	PLAIN	
	PL 3/8x2	1	2	pl021		2		P	PLAIN	
	PL 3/8x2	1	4	pl022		2		P	PLAIN	
4	3" WIDE COUPONS	1	11	aa204	●	28	FAB FROM W8x21			900-5
4	3" WIDE COUPONS	1	11	ab204	●	28	FAB FROM W8x28			900-6
4	3" WIDE COUPONS	1	11	ac204	●	28	FAB FROM W24x68	ON	RADIUS	900-2
4	3" WIDE COUPONS	1	11	ad204	●	6	FAB FROM HSS 6x0.50	ON	RADIUS	900-18
4	3" WIDE COUPONS	1	11	af204	●	6	FAB FROM HSS 5x0.50			900-19
4	3" WIDE COUPONS	1	11	ag204	●	6	FAB FROM HSS 6x6			900-20
4	3" WIDE COUPONS	1	11	ah204	●	6	FAB FROM HSS 5x5			900-21
2	PL 3/4x2 COUPONS	1	11	aj204	●	2	FAB FROM GUSSET PL			900-17

REV	DATE	DESCRIPTION	BY	CHK
1	08-21-09	REVISED DIMENSIONS (pl011, pl012, pl014 & pl019)	AEU	RA

MTL. GR. DENOTES MATERIAL GRADE: 1 = A36; 2 = A572-50; 5 = A572-42; 28 = A992-50; 6 = A500-B; 7 = A573-B

STANDARDS
UNIVERSITY OF CALIFORNIA at BERKELEY
SCBF SPECIMEN BRACING REPLACEMENT
BERKELEY, CA.

MATERIAL: AEU 08-14-09
CODE: AEU 08-14-09
INPUT:

Herrick

SHOP ISSUE AUG 2 1 2009

HOLES : AS NOTED	DRAWN BY	AEU	DATE	08-10-2009	JOB	9890
PAINT : NONE	CHECKED BY	AEU	DATE	08-20-2009	SHEET	S1

SCALE : 1:12

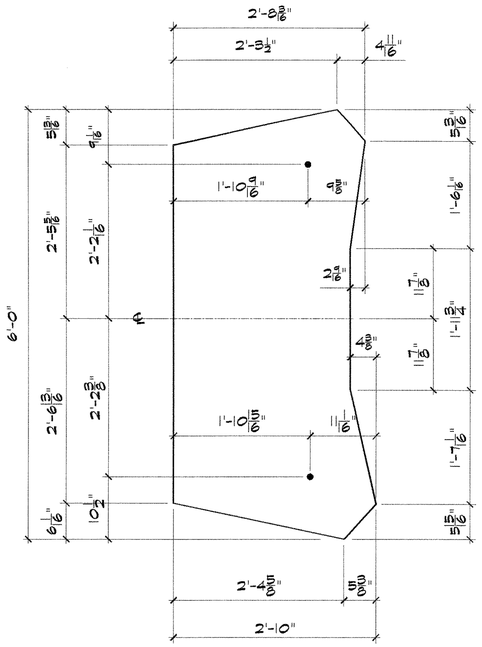

PL 3/4 x 34 x 6'-0 p2001

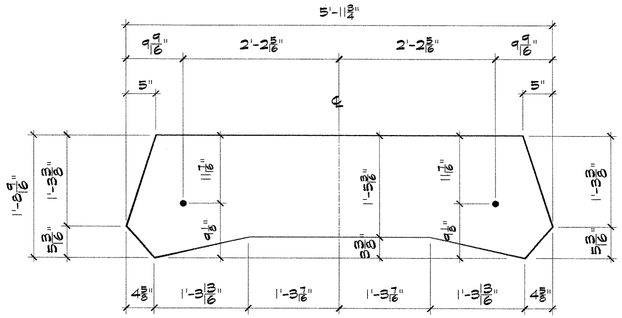

PL 3/4 x 20 9/16 x 5'-11 3/4 p2003

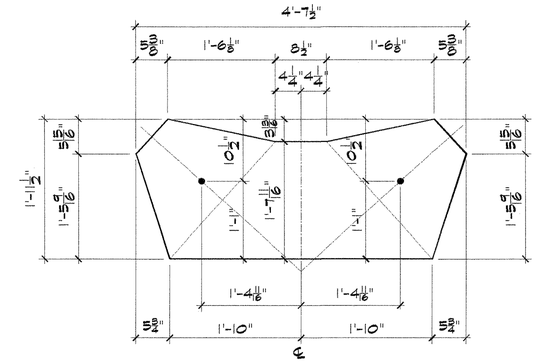

PL 3/4 x 23 1/2 x 4'-7 1/2 p2004

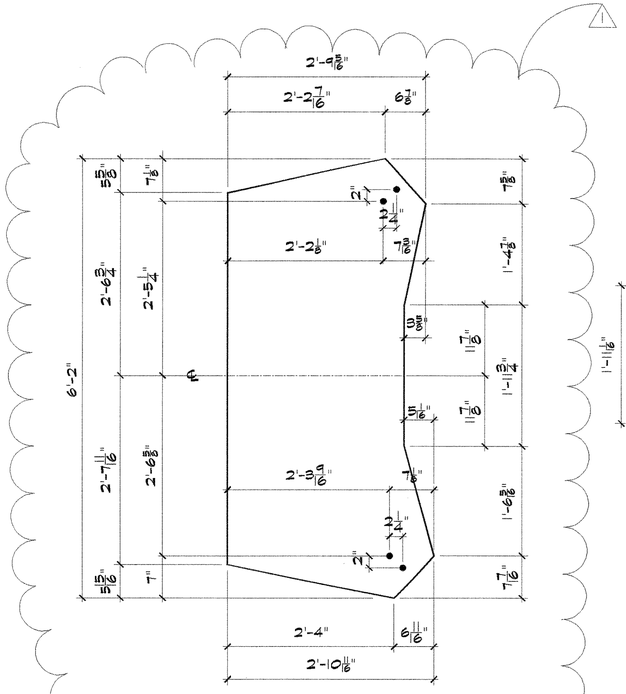

PL 3/4 x 34 11/16 x 6'-2 p2002

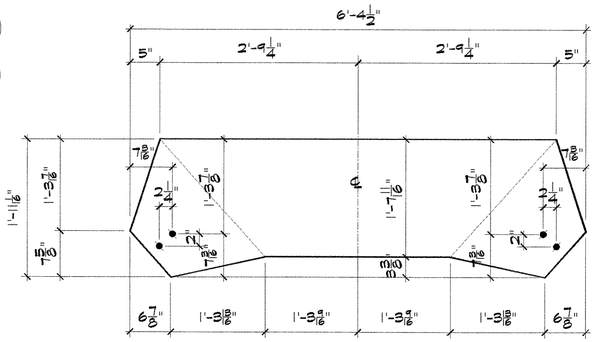

PL 3/4 x 23 1/16 x 6'-4 1/2 p2005

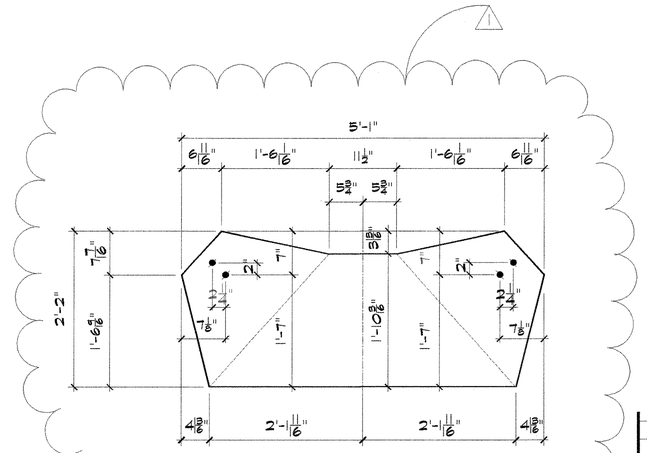

PL 3/4 x 26 x 5'-1 p2006

BILL OF MATERIALS

QTY.	DESCRIPTION	LENGTH FT	LENGTH INCHES	MARK	●	MTL GR	REMARKS	CODE		MO MTO
4	PL 3/4x34	6	0	p2001		2		D	S/H	-
2	PL 3/4x34 11/16	6	2	p2002		2		D	S/H	-
2	PL 3/4x20 9/16	5	11 3/4	p2003		2		D	S/H	-
2	PL 3/4x23 1/2	4	7 1/2	p2004		2		D	S/H	-
ONE	PL 3/4x23 1/16	6	4 1/2	p2005		2		D	S/H	-
ONE	PL 3/4x26	5	1	p2006		2		D	S/H	-

REV	DATE	DESCRIPTION	BY	CHK
1	08-21-09	REVISED GUSSET DIMENSIONS	AEU	RA

MTL. GR. DENOTES MATERIAL GRADE: 1 = A36; 2 = A572-50; 5 = A572-42; 28 = A992-50; 6 = A500-B; 7 = A573-B

GUSSET PLATES

UNIVERSITY OF CALIFORNIA at BERKELEY

SCBF SPECIMEN BRACING REPLACEMENT

BERKELEY, CA.

Herrick

MATERIAL: AEU 08-14-09

CODE: AEU 08-14-09

INPUT

SHOP ISSUE: AUG 2 1 2009

HOLES: 13/16" U.N.O.	DRAWN BY	AEU	DATE	08-10-2009	JOB	9890	
PAINT: NONE	CHECKED BY	RA	DATE	08-20-2009	SHEET	S2	1

SCALE: 1:12

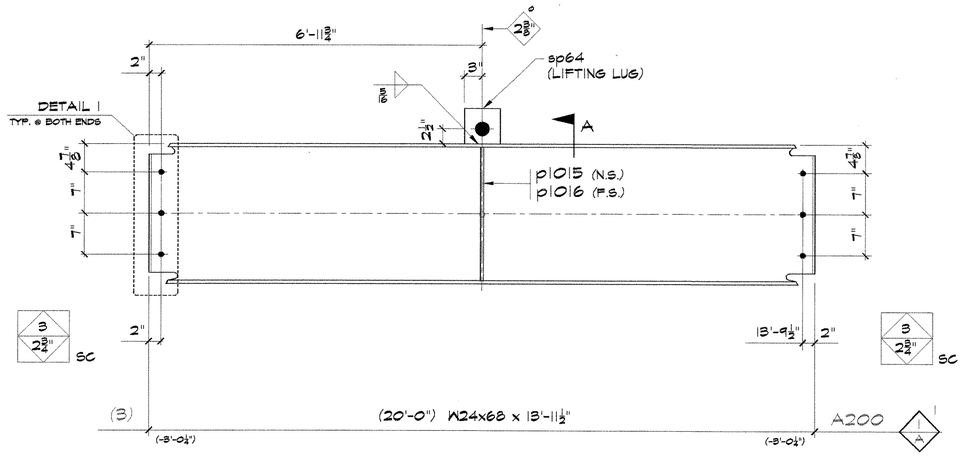

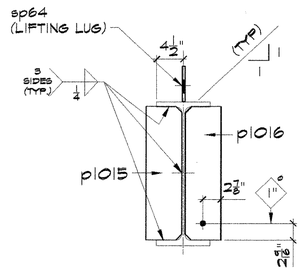

SECTION - A

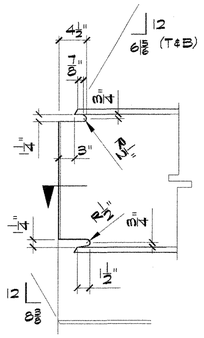

DETAIL 1

BILL OF MATERIALS

QTY.	DESCRIPTION	LENGTH FT	LENGTH INCHES	MARK	●	MTL GR	REMARKS	CODE	MO MTO
3	BEAM				●				
3	W24X68	13	11½	A200		28		P2E	900-1
3	PL ½x6	1	10 9/16	p1015		1			
3	PL ½x6	1	10 9/16	p1016		1			
3	PL ½x6	0	6	sp64					
18	⅞Φ A490 SC	0	2¾	?p3723			w/ N&W		

REV	DATE	DESCRIPTION	BY	CHK

MTL. GR. DENOTES MATERIAL GRADE			
	1 = A36 2 = A572-50	5 = A572-42 28 = A992-50	6 = A500-B 7 = A513-B

BEAM

UNIVERSITY OF CALIFORNIA at BERKELEY

SCBF SPECIMEN BRACING REPLACEMENT

BERKELEY , CA.

ORIGINAL

Herrick

MATERIAL: AEU 08-14-09

CODE: AEU 08-14-09

INPUT:

SHOP ISSUE: AUG 2 1 2009

HOLES : 13/16" U.N.O.	DRAWN BY	AEU	DATE	08-10-2009	JOB	9893
PAINT : NONE	CHECKED BY	RA	DATE	08-20-2009	SHEET	200

SCALE : 1:12

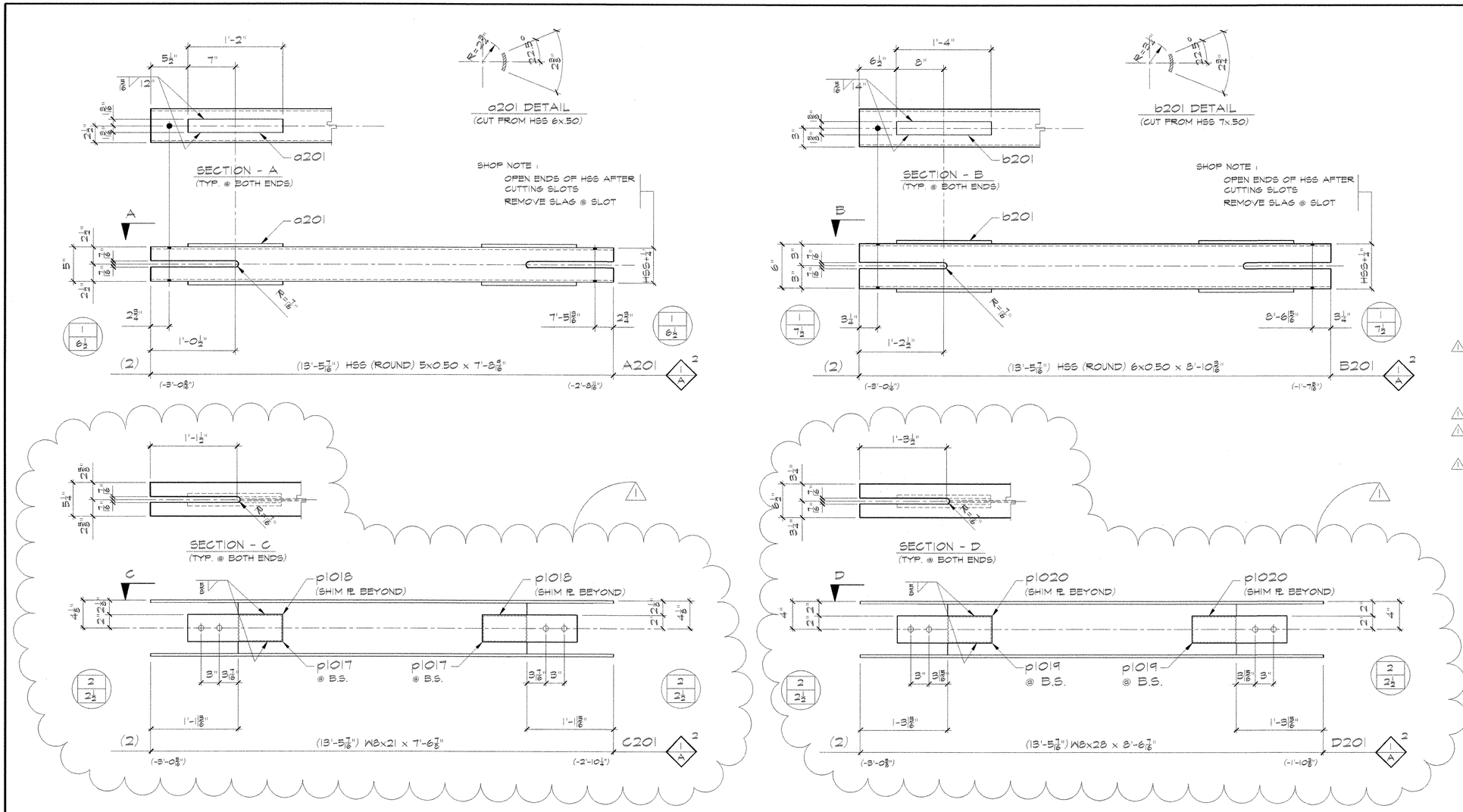

BILL OF MATERIALS

QTY.	DESCRIPTION	LENGTH FT	LENGTH INCHES	MARK	●	MTL GR	REMARKS	CODE	MO MTO
2	HSS BRACE				●			X	
2	HSS 5x0.50	7	8 9/16	A201		6			900-8
8	REINF. PL	1	2	a201		6	CUT FROM HSS 6x0.50		900-22
4	3/4Φ A307	0	6 1/2	?pl662			w/ N&W		
2	HSS BRACE				●			X	
2	HSS 6x0.50	8	10 9/16	B201		6			900-8
8	REINF. PL	1	4	b201		6	CUT FROM HSS 7x0.50		900-23
2	3/4Φ A307	0	7 1/2	?pl672			w/ N&W		
2	W8 BRACE				●			X	
2	W8x21	7	6 7/8	C201		28			900-3
8	PL 1/2x4	1	2	p1017		2			
4	PL 1/4x4	0	5 9/16	p1018		1	SHIM PL		
8	3/4Φ A307	0	2 1/2	?pl622			w/ N&W		
2	W8 BRACE				●			X	
2	W8x28	8	6 7/16	D201		28			900-4
8	PL 1/2x4	1	4	p1019		2			
4	PL 3/16x4	0	6 9/16	p1020		1	SHIM PL		
8	3/4Φ A307	0	2 1/2	?pl622			w/ N&W		
2	HSS BRACE				●			X	
2	HSS 5x5x5/16	7	8 9/16	F201		6			900-10
8	PL 5/8x2	1	2	p1021		2			
4	3/4Φ A307	0	6 1/2	?pl662			w/ N&W		
2	HSS BRACE				●			X	
2	HSS 6x6x3/8	8	10 9/16	G201		6			900-9
8	PL 5/8x2	1	4	p1022		2			
4	3/4Φ A307	0	7 1/2	?pl672			w/ N&W		

REV	DATE	DESCRIPTION	BY	CHK
1	08-21-09	REVISED BEAM DIMENSIONS	AEU	RA

MTL. GR. DENOTES MATERIAL GRADE: 1 = A36; 2 = A572-50; 5 = A572-42; 28 = A992-50; 6 = A500-B; 7 = A513-B

BRACINGS

UNIVERSITY OF CALIFORNIA at BERKELEY

SCBF SPECIMEN BRACING REPLACEMENT

BERKELEY, CA.

Herrick

MATERIAL: AEU 08-14-09

CODE: AEU 08-14-09

INPUT

SHOP ISSUE: AUG 2 1 2009

HOLES : 13/16"	DRAWN BY	AEU	DATE	08-10-2009	JOB	9895
PAINT : NONE	CHECKED BY	RA	DATE	08-20-2009	SHEET	201 (1)

SCALE : 1:12

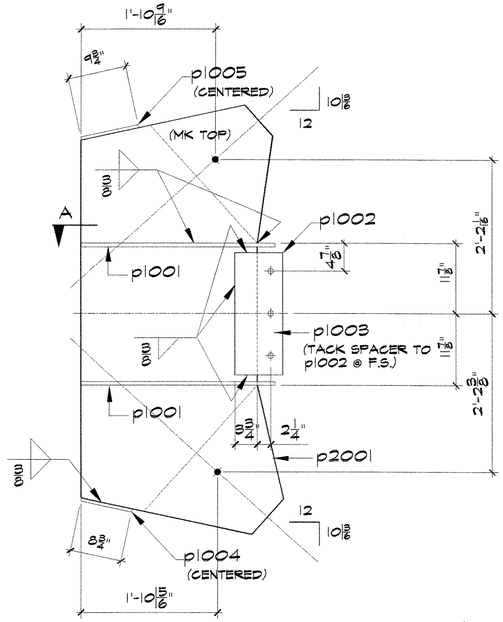

(4) GUSSET PL ASSY A202

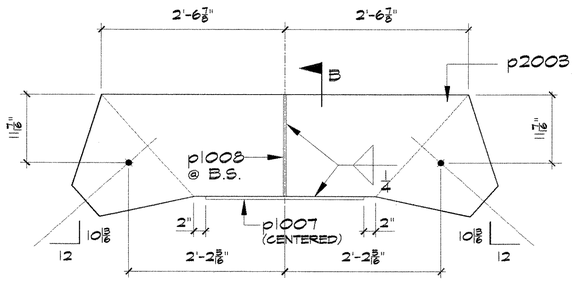

(2) GUSSET PL ASSY C202

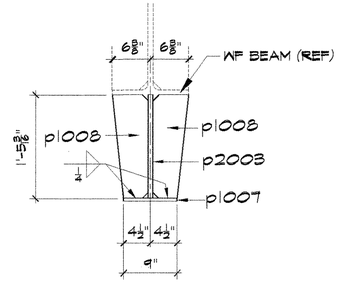

SECTION - B

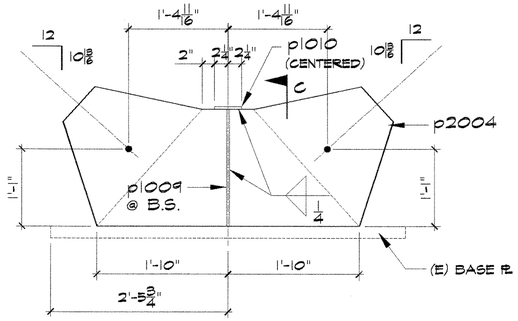

(2) GUSSET PL ASSY D202

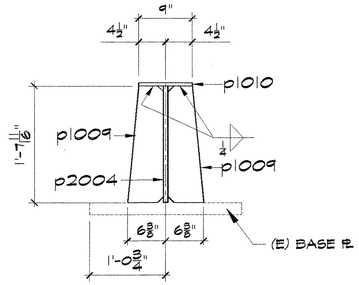

SECTION - C

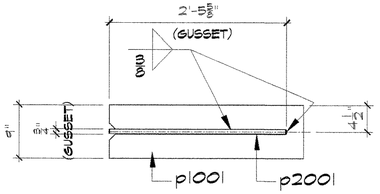

SECTION - A

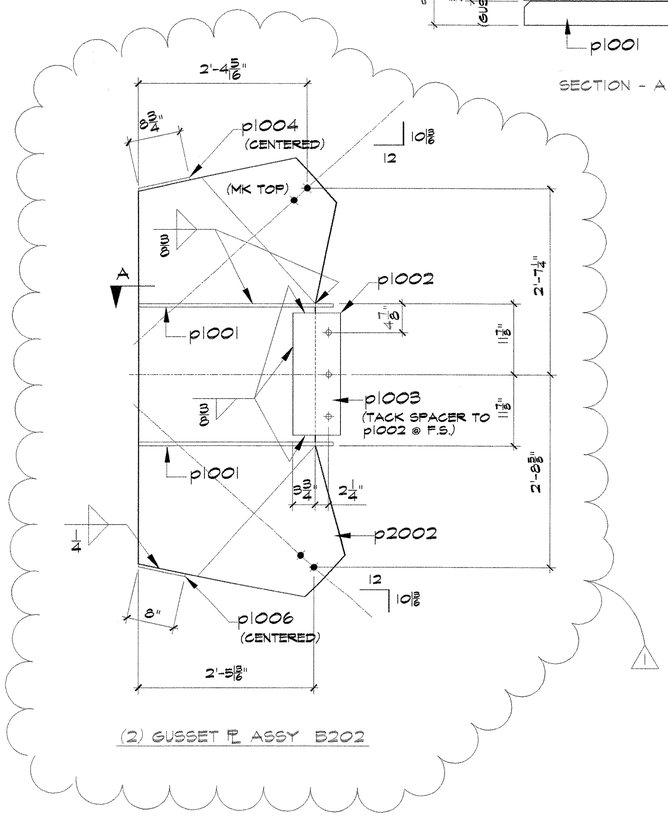

(2) GUSSET PL ASSY B202

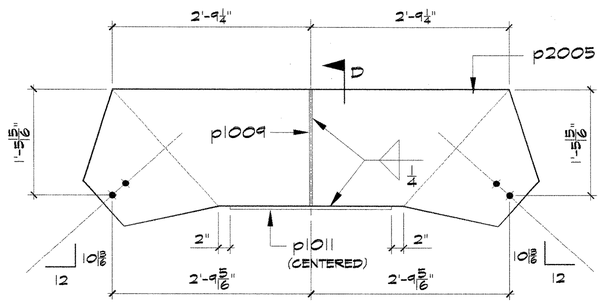

(ONE) GUSSET PL ASSY F202

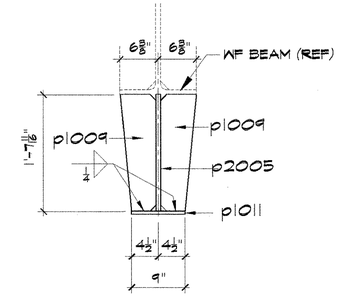

SECTION - D

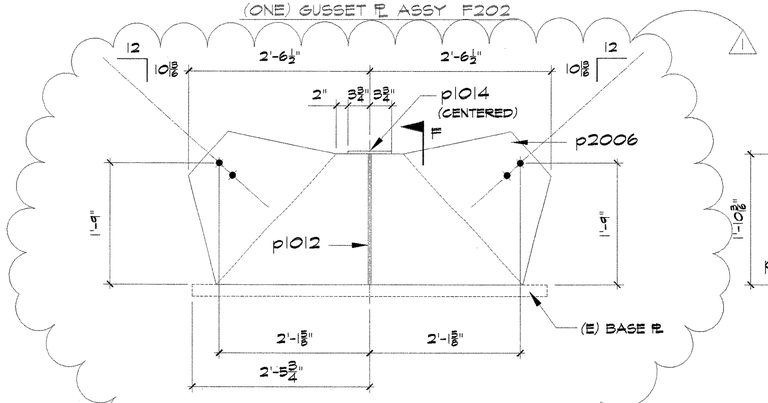

(ONE) GUSSET PL ASSY G202

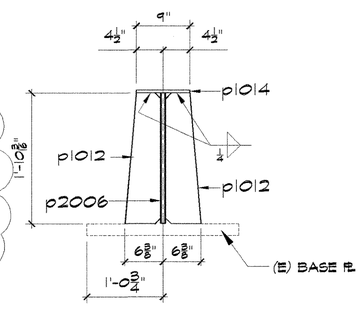

SECTION - F

BILL OF MATERIALS

	GTY.	DESCRIPTION	LENGTH FT	LENGTH INCHES	MARK	●	MTL GR	REMARKS	CODE	MO MTO
	4	GUSSET PL ASSY			A202	●				
	4	PL 3/4x34	6	0	p2001		2			900-11
	8	PL 5/8x9	2	8 5/8	p1001		2			
	4	PL 1/2x8	1	8 5/8	p1002		2			
	4	PL 1/8x4	1	8 5/8	p1003		1			
	4	PL 1/2x8 3/4	0	9	p1004		1			
	4	PL 1/2x9	0	9 3/4	p1005		1			
			2	8 5/8						
	2	GUSSET PL ASSY			B202	●				
	2	PL 3/4x34 11/16	6	2	p2002		2			900-12
	4	PL 5/8x9	2	8 5/8	p1001		2			
	2	PL 1/2x8	1	8 5/8	p1002		2			
	2	PL 1/8x4	1	8 5/8	p1003		1			
	2	PL 1/2x8 3/4	0	9	p1004		1			
	2	PL 1/2x8	0	9	p1006		1			
	2	GUSSET PL ASSY			C202	●				
	2	PL 3/4x20 9/16	5	11 3/4	p2003		2			900-13
	2	PL 1/2x9	2	2 7/8	p1007		1			
	4	PL 1/2x6	1	5 3/16	p1008		1			
	2	GUSSET PL ASSY			D202	●				
	2	PL 3/4x23 1/2	4	7 1/2	p2004		2			900-14
	4	PL 1/2x6	1	7 11/16	p1009		1			
	2	PL 1/2x4 1/2	0	9	p1010		1			
	ONE	GUSSET PL ASSY			F202	●				
	ONE	PL 3/4x23 11/16	6	4 1/2	p2005		2			900-15
	2	PL 1/2x6	1	7 11/16	p1009		1			
	ONE	PL 1/2x9	2	3 1/8	p1011		1			
	ONE	GUSSET PL ASSY			G202	●				
1	ONE	PL 3/4x26	5	1	p2006		2			900-17
1	2	PL 1/2x6	1	10 3/16	p1012		1			
1	2	PL 1/2x7 1/2	0	9	p1014		1			

REV	DATE	DESCRIPTION	BY	CHK
1	08-21-09	REVISED GUSSET DIMENSIONS	AEU	RA

MTL. GR. DENOTES MATERIAL GRADE: 1 = A36; 2 = A572-50; 5 = A572-42; 28 = A992-50; 6 = A500-B; 7 = A573-B

GUSSET ASSEMBLY
UNIVERSITY OF CALIFORNIA at BERKELEY
SCBF SPECIMEN BRACING REPLACEMENT
BERKELEY, CA.

MATERIAL: AEU 08-14-09
CODE: AEU 08-14-09
INPUT:
SHOP ISSUE: AUG 2 1 2009

Herrick

HOLES: 13/16" U.N.O.	DRAWN BY	AEU	DATE	08-10-2009	JOB	9895
PAINT: NONE	CHECKED BY	RA	DATE	08-20-2009	SHEET	202 1

SCALE: 1:12