Plan View

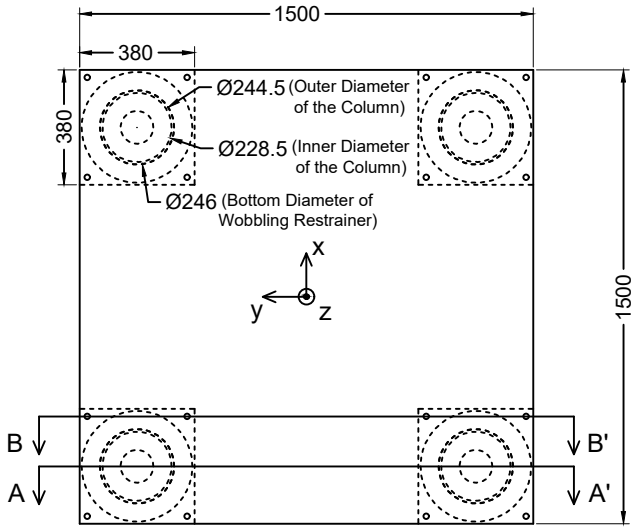

Section B-B'

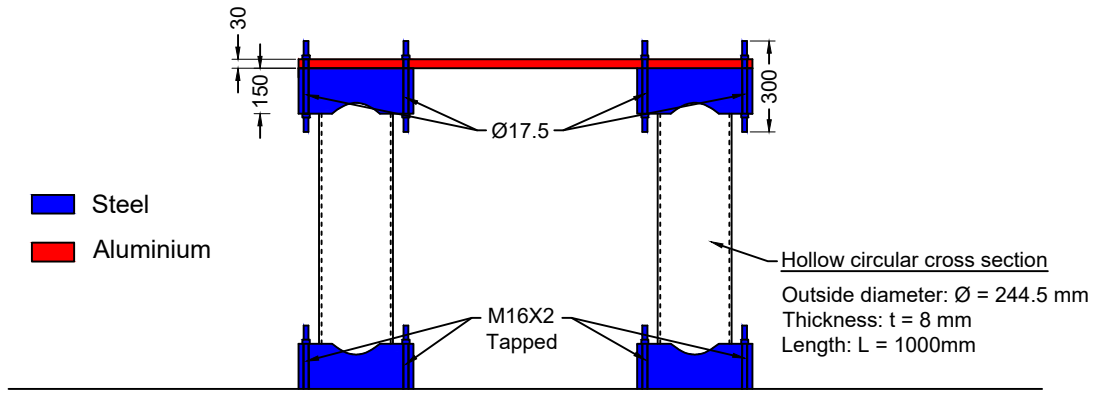

Section A-A'

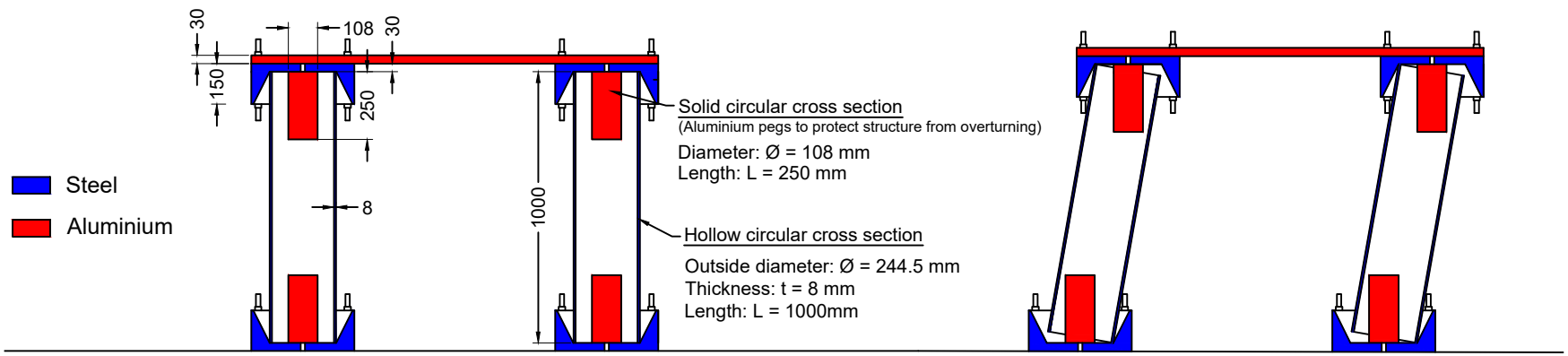

All dimensions in millimeters [mm]

ETH Eidgenössische Technische Hochschule Zürich Swiss Federal Institute of Technology Zurich

University of BRISTOL

PEER

Rocking Podium Test

Plan and Section View of Specimen